DENON

Ver. 6

Please refer to the MODIFICATION NOTICE.

SERVICE MANUAL

MODEL	JP	E3	E2	EK	K2A	E1C	E1K	EUT
RCD-N7		✓	✓			✓ 5		

NETWORK CD RECEIVER

- For purposes of improvement, specifications and design are subject to change without notice.
- Please use this service manual with referring to the operating instructions without fail.
- Some illustrations using in this service manual are slightly different from the actual set.

DENON

D&M Holdings Inc.

S0458-1V06DM/DG1203

Copyright 2012 D&M Holdings Inc. All rights reserved.
WARNING: Violators will be prosecuted to the maximum extent possible.

SAFETY PRECAUTIONS

The following check should be performed for the continued protection of the customer and service technician.

LEAKAGE CURRENT CHECK

Before returning the unit to the customer, make sure you make either (1) a leakage current check or (2) a line to chassis resistance check. if the leakage current exceeds 0.5 milliamps, or if the resistance from chassis to either side of the power cord is less than 460 kohms, the unit is defective.
Be sure to test for leakage current with the AC plug in both polarities, in addition, in each power ON, OFF and STANDBY mode, if applicable.

CAUTION Please heed the points listed below during servicing and inspection.

◎ Heed the cautions!

Spots requiring particular attention when servicing, such as the cabinet, parts, chassis,etc., have cautions indicated on labels. be sure to heed these causions and the cautions indicated in the handling instructions.

◎ Caution concerning electric shock!

(1) An AC voltage is impressed on this set, so touching internal metal parts when the set is energized could cause electric shock. Take care to avoid electric shock, by for example using an isolating transformer and gloves when servicing while the set is energized, unplugging the power cord when replacing parts, etc.

(2) Tere are high voltage parts inside. Handle with extra care when the set is energized.

◎ Caution concerning disassembly and assembly!

Through great care is taken when manufacturing parts from sheet metal, there may in some rare cases be burrs on the edges of parts which could cause injury if fingers are moved across them. Use gloves to protect your hands.

◎ Only use designated parts!

The set's parts have specific safety properties (fire resistance, voltage resistance, etc.). For replacement parts, be sure to use parts which have the same poroperties. In particular, for the important safety parts that are marked ⚠ on wiring diagrams and parts lists, be sure to use the designated parts.

◎ Be sure to mount parts and arrange the wires as they were originally!

For safety seasons, some parts use tape, tubes or other insulating materials, and some parts are mounted away from the surface of printed circuit boards. Care is also taken with the positions of the wores omsode amd clamps are used to keep wires away from heating and high voltage parts, so be sure to set everything back as it was originally.

◎ Inspect for safety after servicing!

Check that all screws, parts and wires removed or disconnected for servicing have been put back in their original positions, inspect that no parts around the area that has been serviced have been negatively affected, conduct an inslation check on the external metal connectors and between the blades of the power plug, and otherwise check that safety is ensured.

(Insulation check procedure)
Unplug the power cord from the power outlet, disconnect the antenna, plugs, etc., and turn the power switch on. Using a 500V insulation resistance tester, check that the inplug and the externally exposed metal parts (antenna terminal, headphones terminal, input terminal, etc.) is 1MΩ or greater. If it is less, the set must be inspected and repaired.

CAUTION Concerning important safety parts

Many of the electric and structural parts used in the set have special safety properties. In most cases these properties are difficult to distinguish by sight, and using replacement parts with higher ratings (rated power and withstand voltage) does not necessarily guarantee that safety performance will be poreserved. Parts with safety properties are indicated as shown below on the wiring diagrams and parts lists is this service manual. Be sure to replace them with parts with the designated part number.

(1) Schematic diagrams ..... Indicated by the ⚠ mark.
(2) Parts lists ..... Indicated by the ⚠ mark.
Using parts other than the designated parts could result in electric shock, fires or other dangerous situations.

NOTE FOR SCHEMATIC DIAGRAM

WARNING:
Parts marked with this symbol ⚠ have critical characteristics. Use ONLY replacement parts recommended by the manufacturer.

CAUTION:
Before returning the unit to the customer, make sure you make either (1) a leakage current check or (2) a line to chassis resistance check. If the leakage current exceeds 0.5 milliamps, or if the resistance from chassis to either side of the power cord is less than 460 kohms, the unit is defective.

WARNING:
DO NOT return the unit to the customer until the problem is located and corrected.

NOTICE:
ALL RESISTANCE VALUES IN OHM. k=1,000 OHM / M=1,000,000 OHM
ALL CAPACITANCE VALUES IN MICRO FARAD. P=MICRO-MICRO FARAD EACH VOLTAGE AND CURRENT ARE MEASURED AT NO SIGNAL INPUT CONDITION. CIRCUIT AND PARTS ARE SUBJECT TO CHANGE WITHOUT PRIOR NOTICE.

NOTE FOR PARTS LIST

1. Parts for which "nsp" is indicated on this table cannot be supplied.
2. When ordering of part, clearly indicate "1" and "I" (i) to avoid mis-supplying.
3. Ordering part without stating its part number can not be supplied.
4. Part indicated with the mark "★" is not illustrated in the exploded view.
5. Not including General-purpose Carbon Film Resistor in the P.W.Board parts list. (Refer to the Schematic Diagram for those parts.)
6. Not including General-purpose Carbon Chip Resistor in the P.W.Board parts list. (Refer to the Schematic Diagram for those parts.)

WARNING: Parts marked with this symbol ⚠ have critical characteristics. Use ONLY replacement parts recommended by the manufacturer.

● Resistors

Ex.: RN | 14K | 2E | 182 | G | FR

RN: Type	14K: Shape and performance	2E: Power	182: Resistance	G: Allowable error	FR: Others
RD : Carbon		2B : 1/8 W	F : ±1%		P : Pulse-resistant type
RC : Composition		2E : 1/4 W	G : ±2%		NL : Low noise type
RS : Metal oxide film		2H : 1/2 W	J : ±5%		NB : Non-burning type
RW: winding		3A : 1 W	K : ±10%		FR : Fuse-resistor
RN : Metal film		3D : 2 W	M : ±20%		F : Lead wire forming
RK : Metal mixture		3F : 3 W			
		3H : 5 W			

* Resistance

1 8 2 ⇨ 1800ohm=1.8kohm
- 2 → Indicates number of zeros after effective number.
- 1 8 → 2-digit effective number.

1 R 2 ⇨ 1.2ohm
- 2 → 1-digit effective number.
- 1 R → 2-digit effective number, decimal point indicated by R.

: Units: ohm

● Capacitors

Ex.: CE | 04W | 1H | 3R2 | M | BP

CE: Type	04W: Shape and performance	1H: Dielectric strength	3R2: Capacity	M: Allowable error	BP: Others
CE : Aluminum foil electrolytic		0J : 6.3 V	F : ±1%		HS : High stability type
CA : Aluminium solid electrolytic		1A : 10 V	G : ±2%		BP : Non-polar type
CS : Tantalum electrolytic		1C : 16 V	J : ±5%		HR : Ripple-resistant type
CQ : Film		1E : 25 V	K : ±10%		DL : For change and discharge
CK : Ceramic		1V : 35 V	M : ±20%		HF : For assuring high requency
CC : Ceramic		1H : 50 V	Z : ±80%		U : UL part
CP : Oil		2A : 100 V	: - 20%		C : CSA part
CM : Mica		2B : 125 V	P : +100%		W : UL-CSA part
CF : Metallized		2C : 160 V	C : ±0.25pF		F : Lead wire forming
CH : Metallized		2D : 200 V	D : ±0.5pF		
		2E : 250 V	= : Others		
		2H : 500 V			
		2J : 630 V			

* Capacity (electrolyte only)

2 2 2 ⇨ 2200 μF
- 2 → Indicates number of zeros after effective number.
- 2 2 → 2-digit effective number.
- ・Units: μF.

2 R 2 ⇨ 2.2 μF
- 2 → 1-digit effective number.
- 2 R → 2-digit effective number, decimal point indicated by R
- ・Units: μF.

* Capacity (except electrolyte)

2 2 2 ⇨ 2200pF=0.0022 μF
- 2 → Indicates number of zeros after efective number. (More than 2)
- 2 2 → 2-digit effective number.
- ・Units:pF

2 2 1 ⇨ 220pF
- 1 → Indicates number of zeros after effective numver. (0 or 1)
- 2 2 → 2-digit effective number.
- ・Units:pF

・ When the dielectric strength is indicated in AC,"AC" is included after the dieelectric strength value.

WARNING AND LASER SAFETY INSTRUCTIONS

GB **WARNING**

All ICs and many other semi-conductors are susceptible to electrostatic discharges (ESD). Careless handling during repair can reduce life drastically.
When repairing, make sure that you are connected with the same potential as the mass of the set via a wrist wrap with resistance.
Keep components and tools also at this potential.

NL **WAARSCHUWING**

Alle IC's en vele andere halfgeleiders zijn gevoelig voor elektrostatische ontladingen (ESD).
Onzorgvuldig behandelen tijdens reparatie kan de levensduur drastisch doen verminderen.
Zorg ervoor dat u tijdens reparatie via een polsband met weerstand verbonden bent met hetzelfde potentiaal als de massa van het apparaat.
Houd componenten en hulpmiddelen ook op ditzelfde potentiaal.

F **ATTENTION**

Tous les IC et beaucoup d'autres semi-conducteurs sont sensibles aux décharges statiques (ESD).
Leur longévité pourrait être considérablement écourtée par le fait qu'aucune précaution n'est prise a leur manipulation.
Lors de réparations, s'assurer de bien être relié au même potentiel que la masse de l'appareil et enfiler le bracelet serti d'une résistance de sécurité.
Veiller a ce que les composants ainsi que les outils que l'on utilise soient également a ce potentiel.

D **WARNUNG**

Alle IC und viele andere Halbleiter sind empfindlich gegen elektrostatische Entladungen (ESD).
Unsorgfältige Behandlung bei der Reparatur kann die Lebensdauer drastisch vermindern.
Sorgen sie dafür, das Sie im Reparaturfall über ein Pulsarmband mit Widerstand mit dem Massepotential des Gerätes verbunden sind.
Halten Sie Bauteile und Hilfsmittel ebenfalls auf diesem Potential.

I **AVVERTIMENTO**

Tutti IC e parecchi semi-conduttori sono sensibili alle scariche statiche (ESD).
La loro longevita potrebbe essere fortemente ridatta in caso di non osservazione della piu grande cauzione alla loro manipolazione.
Durante le riparazioni occorre quindi essere collegato allo stesso potenziale che quello della massa dell'apparecchio tramite un braccialetto a resistenza.
Assicurarsi che i componenti e anche gli utensili con quali si lavora siano anche a questo potenziale.

GB

Safety regulations require that the set be restored to its original condition and that parts which are identical with those specified be used.

NL

Veiligheidsbepalingen vereisen, dat het apparaat in zijn oorspronkelijke toestand wordt terug gebracht en dat onderdelen, identiek aan de gespecifieerde worden toegepast.

"Pour votre sécurité, ces documents doivent être utilisés par des spécialistes agrées, seuls habilités à réparer votre appareil en panne."

D

Bei jeder Reparatur sind die geltenden Sicherheitsvorschriften zu beachten.
Der Originalzustand des Gerats darf nicht verandert werden.
Fur Reparaturen sind Original-Ersatzteile zu verwenden.

I

Le norme di sicurezza esigono che l'apparecchio venga rimesso nelle condizioni originali e che siano utilizzati pezzi di ricambiago idetici a quelli specificati.

F

Les normes de sécurité exigent que l'appareil soit remis a l'état d'origine et que soient utilisées les pièces de rechange identiques à celles spécifiées.

LASER SAFETY

This unit employs a laser. Only a qualified service person should remove the cover or attempt to service this device, due to possible eye injury.

USE OF CONTROLS OR ADJUSTMENTS OR PERFORMANCE OF PROCEDURE OTHER THAN THOSE SPECIFIED HEREIN MAY RESULT IN HAZARDOUS RADIATION EXPOSURE.

AVOID DIRECT EXPOSURE TO BEAM

WARNING

The use of optical instruments with this product will increase eye hazard.
Repair handling should take place as much as possible with a disc loaded inside the player

WARNING LOCATION: INSIDE ON LASER COVERSHIELD

CAUTION VISIBLE AND INVISIBLE LASER RADIATION WHEN OPEN AVOID EXPOSURE TO BEAM
ADVARSEL SYNLIG OG USYNLIG LASERSTRÅLING VED ÅBNING UNDGÅ UDSÆTTELSE FOR STRÅLING
ADVARSEL SYNLIG OG USYNLIG LASERSTRÅLING NÅR DEKSEL Å PNES UNNGÅ EKSPONERING FOR STRÅLEN
VARNING SYNLIG OCH OSYNLIG LASERSTRÅLNING NÄR DENNA DEL ÄR ÖPPNAD BETRAKTA EJ STRÅLEN
VARO! AVATT AESSA OLET ALTTIINA NÄKYVÄLLE JA NÄKYMÄTTÖMÄLLE LASER SÄTEILYLLE. ÄLÄ KATSO SÄTEESEEN
VORSICHT SICHTBARE UND UNSICHTBARE LASERSTRAHLUNG WENN ABDECKUNG GEÖFFNET NICHT DEM STRAHL AUSSETSEN
DANGER VISIBLE AND INVISIBLE LASER RADIATION WHEN OPEN AVOID DIRECT EXPOSURE TO BEAM
ATTENTION RAYONNEMENT LASER VISIBLE ET INVISIBLE EN CAS D'OUVERTURE EXPOSITION DANGEREUSE AU FAISCEAU

030804ec

INSTRUCTIONS FOR HANDLING SEMI-CONDUCTORS AND OPTICAL UNIT

Electrostatic breakdown of the semi-conductors or optical pickup may occur due to a potential difference caused by electrostatic charge during unpacking or repair work.

1. Ground for Human Body

Be sure to wear a grounding band (1 MΩ) that is properly grounded to remove any static electricity that may be charged on the body.

2. Ground for Workbench

Be sure to place a conductive sheet or copper plate with proper grounding (1 MΩ) on the workbench or other surface, where the semi-conductors are to be placed. Because the static electricity charge on clothing will not escape through the body grounding band, be careful to avoid contacting semi-conductors with your clothing

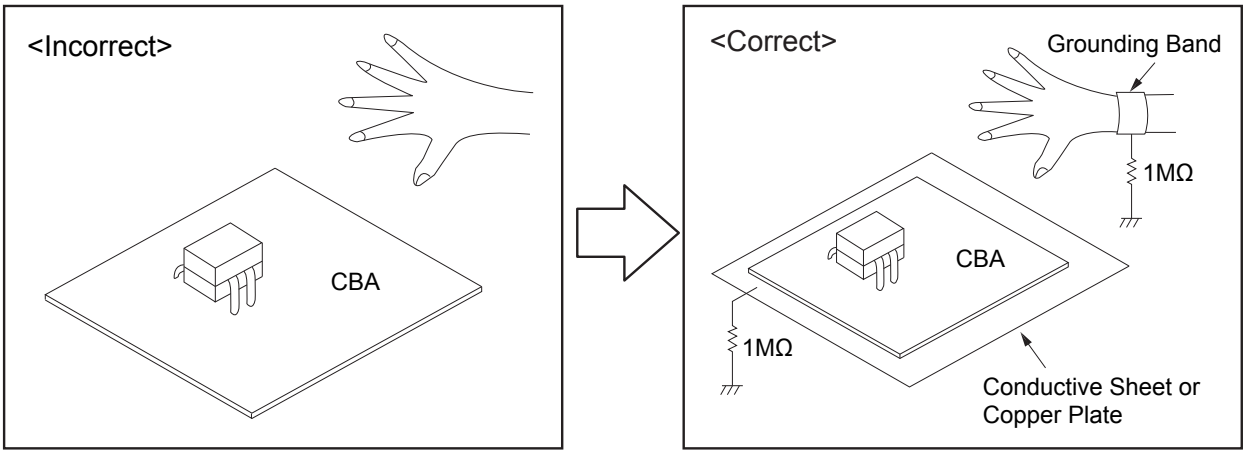

SPECIFICATIONS

❑ CD player

- **Audio performance**

S/N ratio (1 kHz)	100 dB
Dynamic range (1 kHz)	100 dB
Total harmonic distortion (1 kHz)	0.01 %

❑ Audio AMP

Rated output	2-channel driving 65 W + 65 W (4 Ω/ohms, 1 kHz, T.H.D. 0.7 %)
Dynamic power	80 W + 80 W (4 Ω/ohms)
High frequency distortion	0.1 % (Rated output: –3 dB), 4 Ω/ohms, 1 kHz
Input sensitivity/impedance	
AUX1,AUX2	200 mV/32 kΩ
Portable in	110 mV/24 kΩ
Frequency response (5 W, 8 Ω)	
AUX input	5 Hz to 20 kHz (±3 dB)
Total harmonic distortion (1 kHz, 5 W, 8 Ω)	
AUX input	0.05 %
S/N ratio (10 W, 8 Ω, IHF-A)	
AUX input	86 dB

❑ Tuner

- **FM tuner**

Range of receivable frequencies	87.5 to 107.9 MHz(E3) 87.5 to 108.0 MHz(E2)
S/N ratio (mono)	65 dB
Sensitivity (S/N 30 dB)	9 dBμV (IHF)

- **AM tuner**

Range of receivable frequencies	530 to 1710 kHz(E3) 522 to 1611 kHz(E2)
S/N ratio	40 dB
Sensitivity (S/N 20 dB)	55 dBμV/m

❑ Clock

Clock method	Within 1 – 2 minutes per month

❑ Wireless LAN

Network type (wireless LAN standards)

Conforming to IEEE 802.11b
Conforming to IEEE 802.11g
(Conforming to Wi-Fi®)*

Transfer rate

DS-SS: 11 / 5.5 / 2 / 1 Mbps (Automatic switching)
OFDM: 54 / 48 / 36 / 24 / 18 / 12 / 9 / 6 Mbps (Automatic switching)

Security

SSID (Network name)
WEP key (network key) (64/128 bits)
WPA-PSK (TKIP/AES)
WPA2-PSK (TKIP/AES)

Used frequency range

2,412 MHz – 2,462 MHz(E3)
2,412 MHz – 2,472 MHz(E2)

No. of channels

E3: Conforming to IEEE 802.11b : 11ch (DS-SS) (Of which 1 channel used)
Conforming to IEEE 802.11g : 11ch (OFDM) (Of which 1 channel used)
E2: Conforming to IEEE 802.11b : 13ch (DS-SS) (Of which 1 channel used)
Conforming to IEEE 802.11g : 13ch (OFDM) (Of which 1 channel used)

❑ Power supply

Power supply voltage/frequency	AC 120 V, 60 Hz(E3) AC 230 V, 50 Hz(E2)
Power consumption	65 W
Power consumption in standby mode	0.3 W(E3)/ 0.4 W(E2)

❑ Miscellaneous

External dimensions	280 (W) x 112 (H)x 300.7 (D) mm
Weight	4.3 kg

DIMENSION

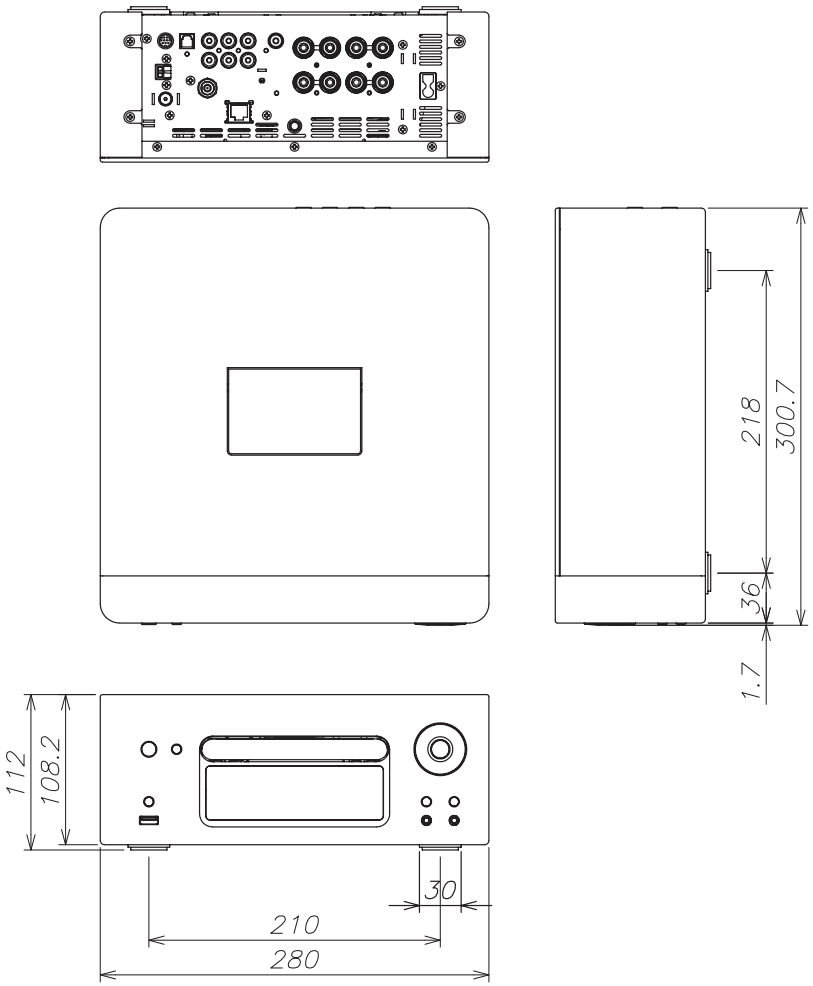

CAUTION IN SERVICING

ABOUT REPLACE THE WLAN MODULE WITH A NEW ONE △5

When replaced of the RCD-N7 WLAN MODULE (8R1821000100S), confirm contents of the following.

(1) Replace the WLAN MODULE with the 8R1821000100S (MAC Address was written).

(2) After the RCD-N7 built, DISC using firmware CR870 (Net (IMG)) to change the E2 or E3 Version.
The file name of CR870 (Net(IMG)): M_CR603_BCI_mmddvv.BIN
NOTE : The mm is month. The dd is date. The vv is version.(Version: NA/EU/JP)
Refer to "9. Update mode (by disc)" (page 31) for the details of the Version up with disc.

① Pressing the VOLUME▼ and CURSOR△ buttons for simultaneously, plug the AC cord into a power outlet. To automatically open the tray, when set is turned on.

② The disk is put on the tray, ⏏ buttons are pushed, and the tray is closed. The update begins pressing the ►/❚❚ ENTER button of the set.

③ To automatically open the tray, when version up is finished.

④ Disconnect the AC cord into a power outlet.

(3) MAC Address Label pasted to Bottom is pasted to Mac Address Label(GEN8341; MAC ADDRESS SUB ASSY) of exchanged WLAN MODULE and it substitutes it.

(4) The firmware is updated by DPMS. Refer to [VERSION UPGRADE PROCEDURE OF FIRMWARE "2. How to update by DPMS"] (page 38) for the details of the Version up.

Initializing NETWORK CD RECEIVER (Factory Rerset)

NETWORK CD RECEIVER initialization should be performed when the µcom, peripheral parts of µcom, and Digital PCB. are replaced.

1. Turn off the power using ON/STANDBY button, unplug the power cord.
2. Plug the power cord into a power outlet while pressing VOLUME▲ and CURSOR▽ button simultaneously.
   ＊ Initialize.

Note:	•All user settings will be lost and this factory setting will be recovered when this initialization mode. So make sure to memorize your setting for restoring after the initialization.

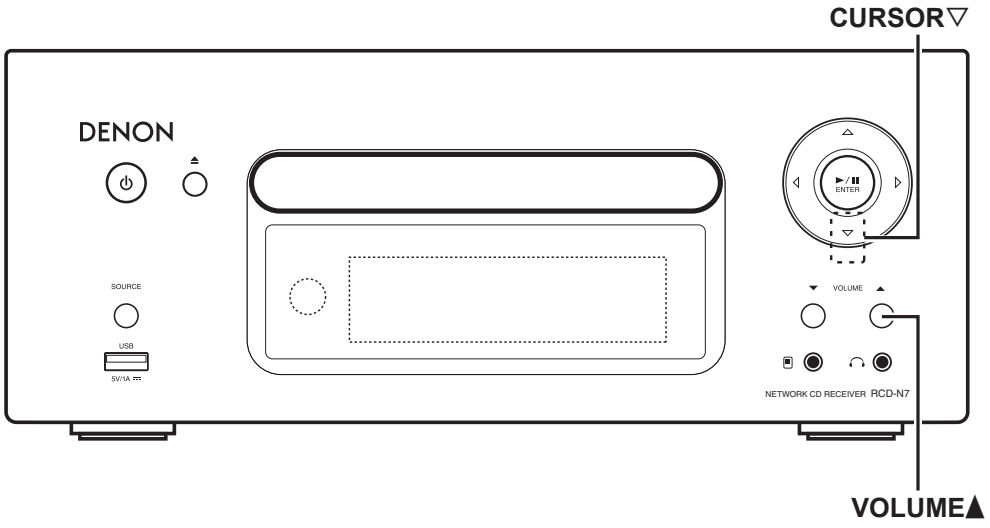

Service tools

Measuring Disc: CD/TCD-784
CD-R/TCD-R082W
CD-RW/TCD-W082W

＊ Refer to "MEASURING METHOD AND WAVEFORMS".

DISASSEMBLY

- Disassemble in order of the arrow of the figure of following flow.
- In the case of the re-assembling, assemble it in order of the reverse of the following flow.
- In the case of the re-assembling, observe "attention of assembling" it.
- If wire bundles are untied or moved to perform adjustment or parts replacement etc., be sure to rearrange them neatly as they were originally bundled or placed afterward.
  Otherwise, incorrect arrangement can be a cause of noise generation.

CAUTION: Through great care is taken when manufacturing parts from sheet metal, there may in some rare cases be burrs on the edges of top cover which could cause injury if fingers are moved across them. Use gloves to protect your hands.

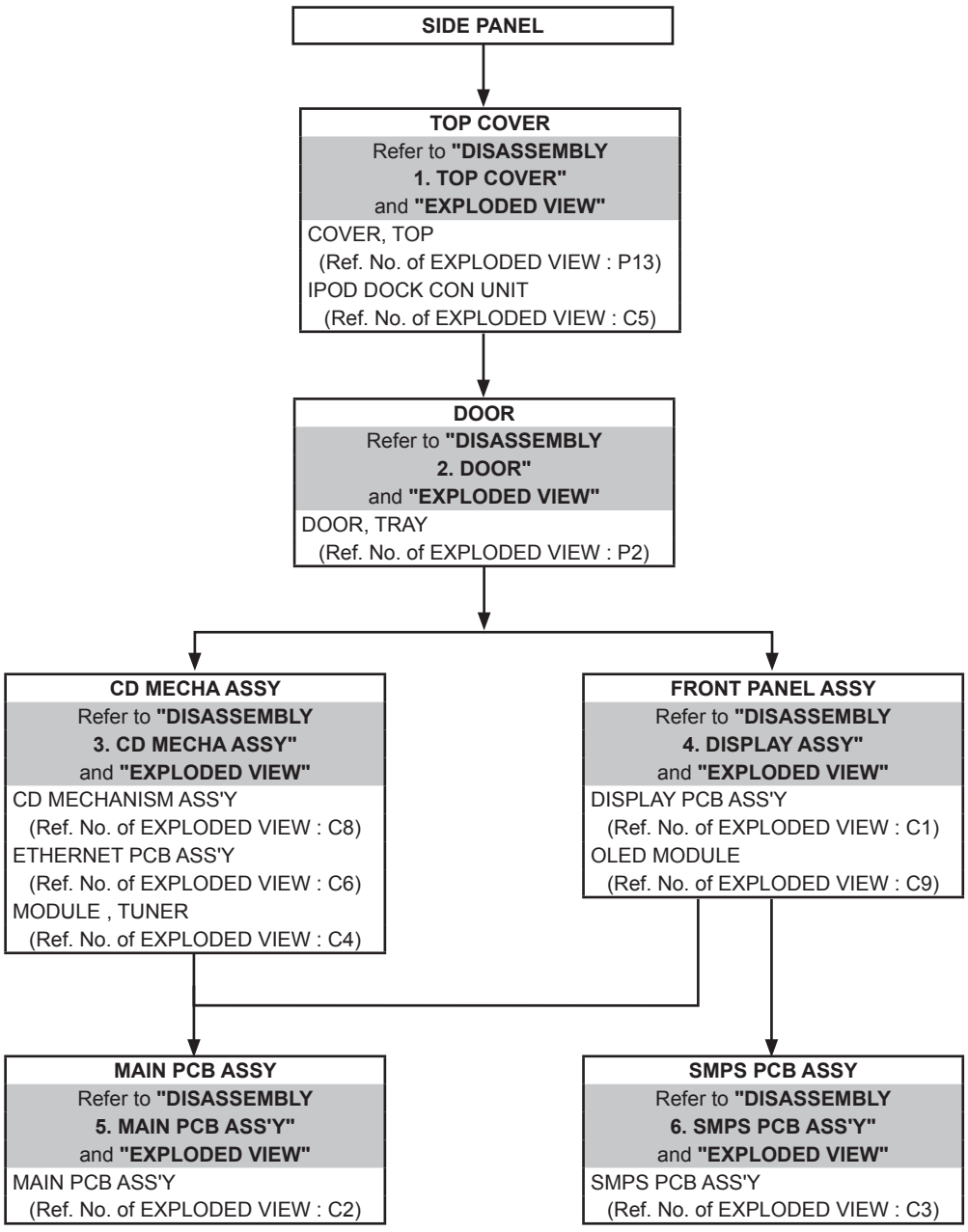

About the photos used for descriptions in the DISASSEMBLY" section.

- The direction from which the photographs used herein were photographed is indicated at "Direction of photograph: ***" at the left of the respective photographs.
- Refer to the table below for a description of the direction in which the photos were taken.
- Photographs for which no direction is indicated were taken from above the product.

The viewpoint of each photograph (Photografy direction)

[View from above]

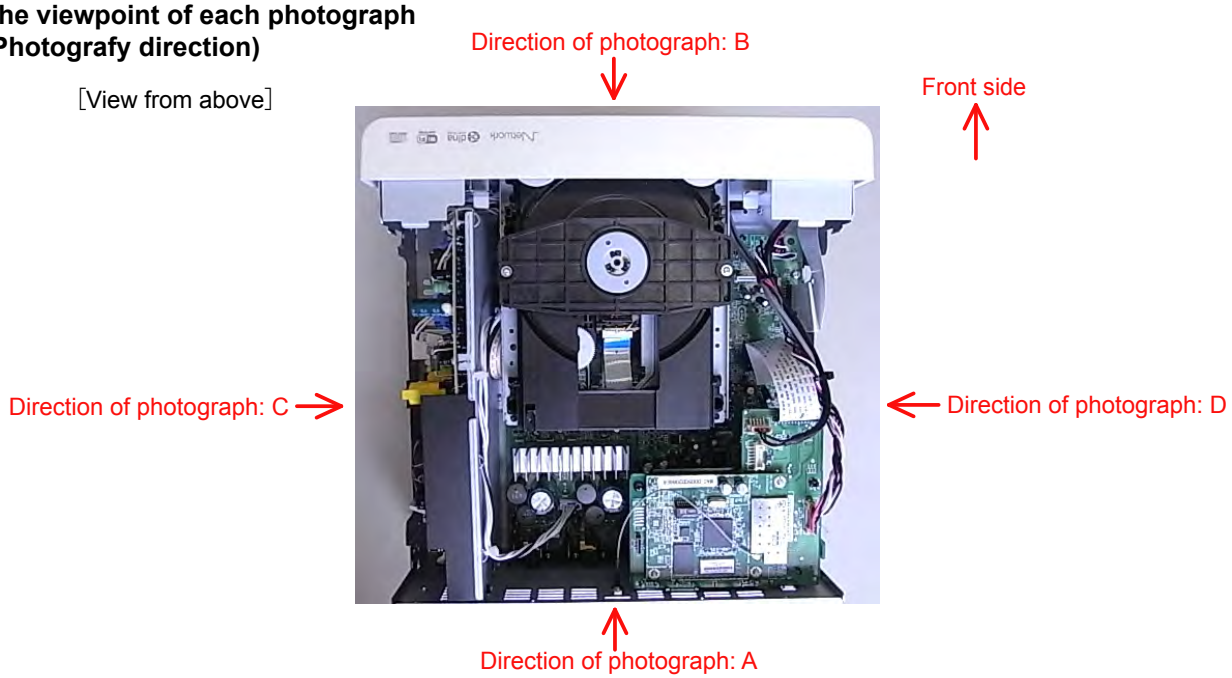

1. TOP COVER

Proceeding : SIDE PANEL → TOP COVER

(1) Remove the screws.

Direction of photograph: C

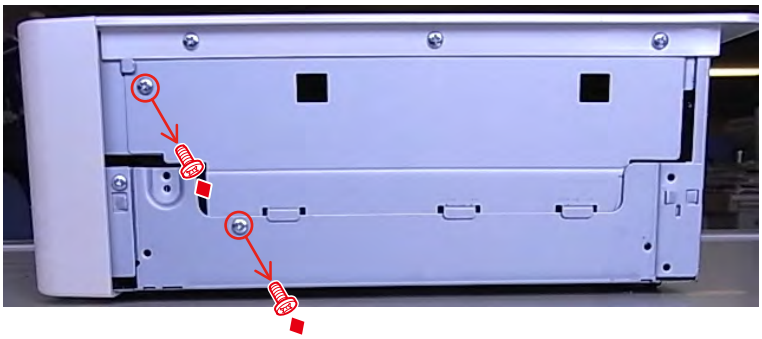

Direction of photograph: D

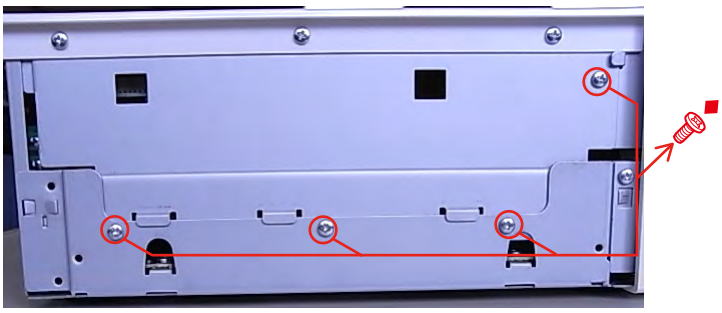

(2) Remove the screws.

Direction of photograph: A

(3) Disconnect the connector wire.

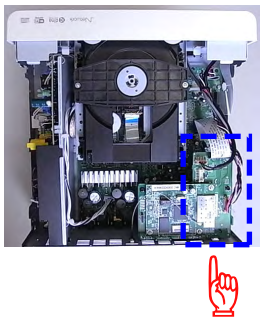

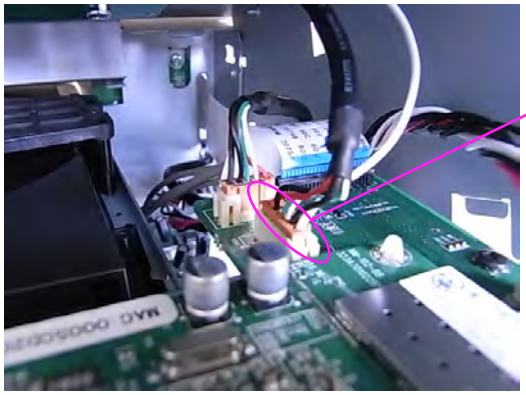

Direction of photograph: A

2. DOOR

Proceeding : SIDE PANEL → TOP COVER → DOOR

(1) Take off the Chucking plate after removing screws.

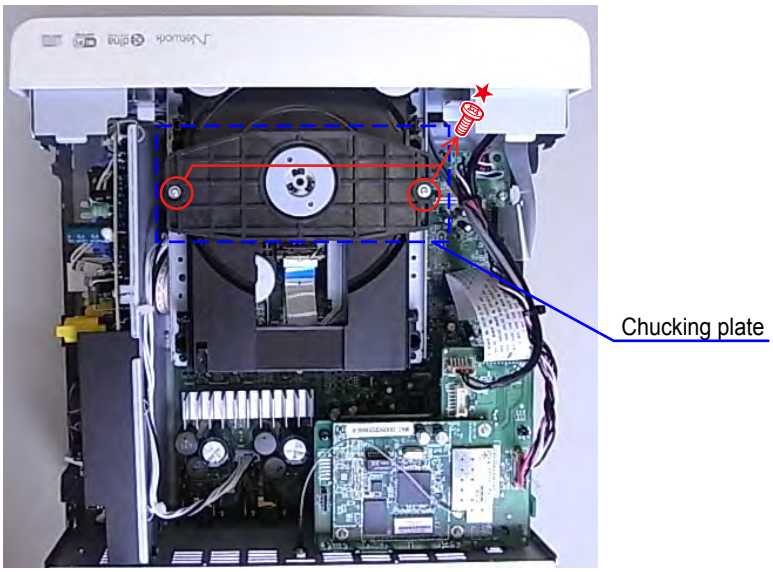

(2) Open the CD tray by turning the Drive gear clockwise.

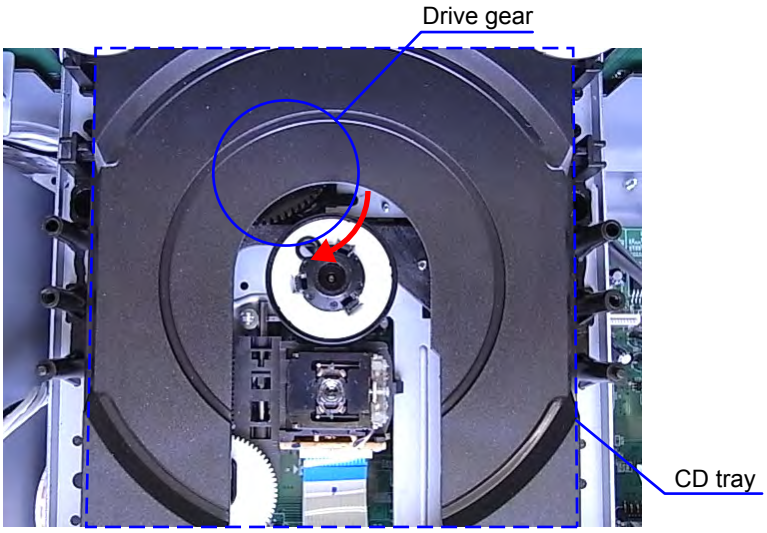

(3) Detach the DOOR CD.

Direction of photograph: B

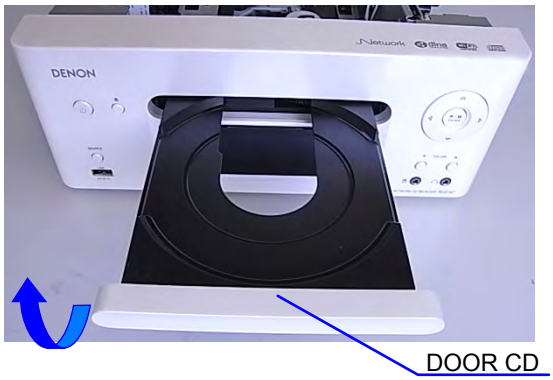

3. CD MECHA ASS'Y

Proceeding : SIDE PANEL → TOP COVER → DOOR → CD MECHA ASSY

(1) Remove the screws.

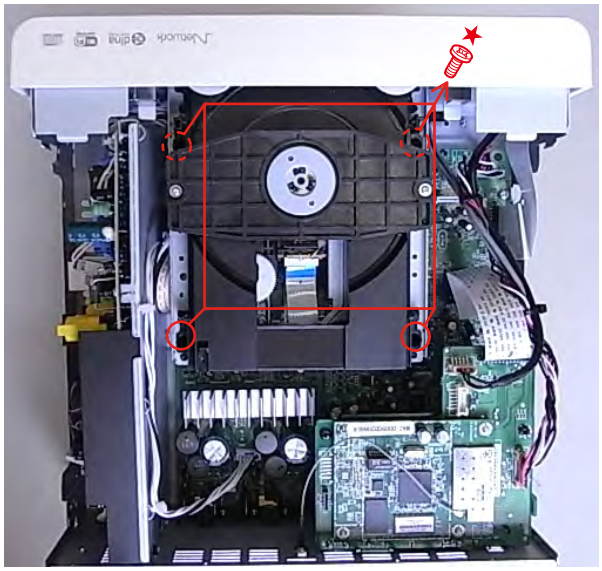

(2) Laser short-circuit in Pick-up of CD MECHANISM ASS'Y, then disconnect the connector wires and FFC cable.
Be sure to wear a grounding band.

Direction of photograph: A

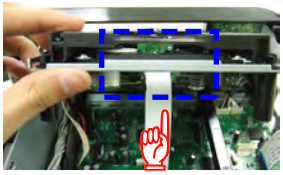

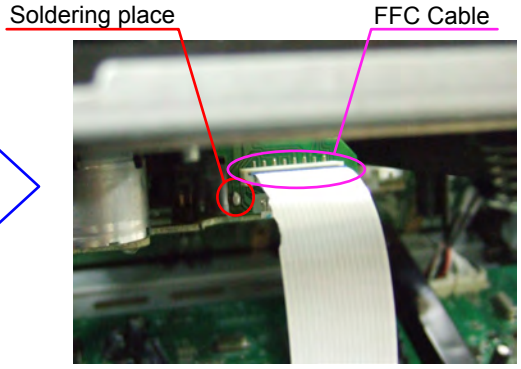

(3) Disconnect the connector wires.

Direction of photograph: C

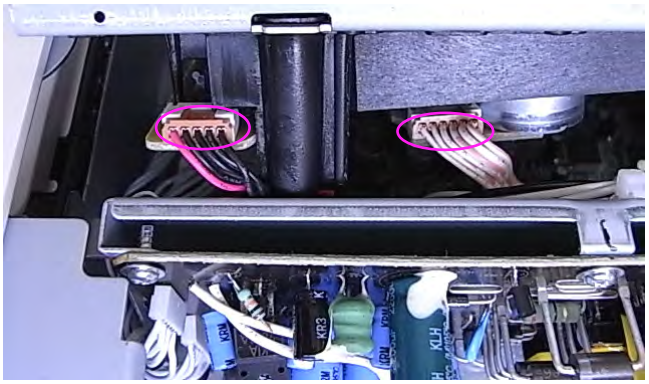

Please refer to "EXPLODED VIEW" for the disassembly method of each PCB included in ETHERNET PCB ASSY and DAB PCB ASSY, TUNER MODULE.

4. FRONT PANEL ASSY

Proceeding : SIDE PANEL → TOP COVER → DOOR → FRONT PANEL ASSY

(1) Remove the screws.

View from bottom

(2) Cut the wire clamp band, then disconnect the connector wires and the FFC Cable.

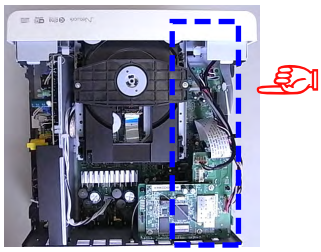

Direction of photograph: D

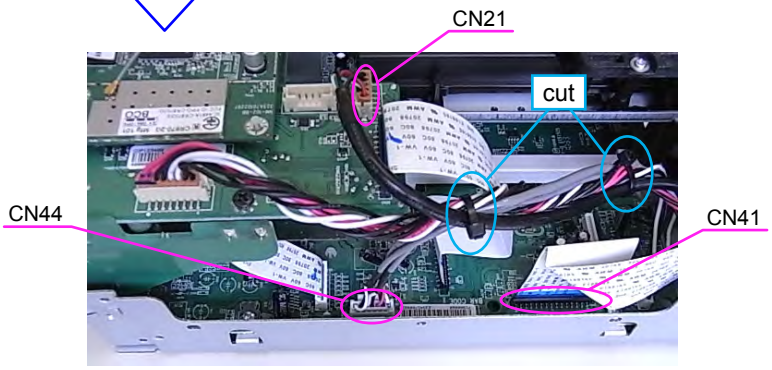

(3) Remove the screws.

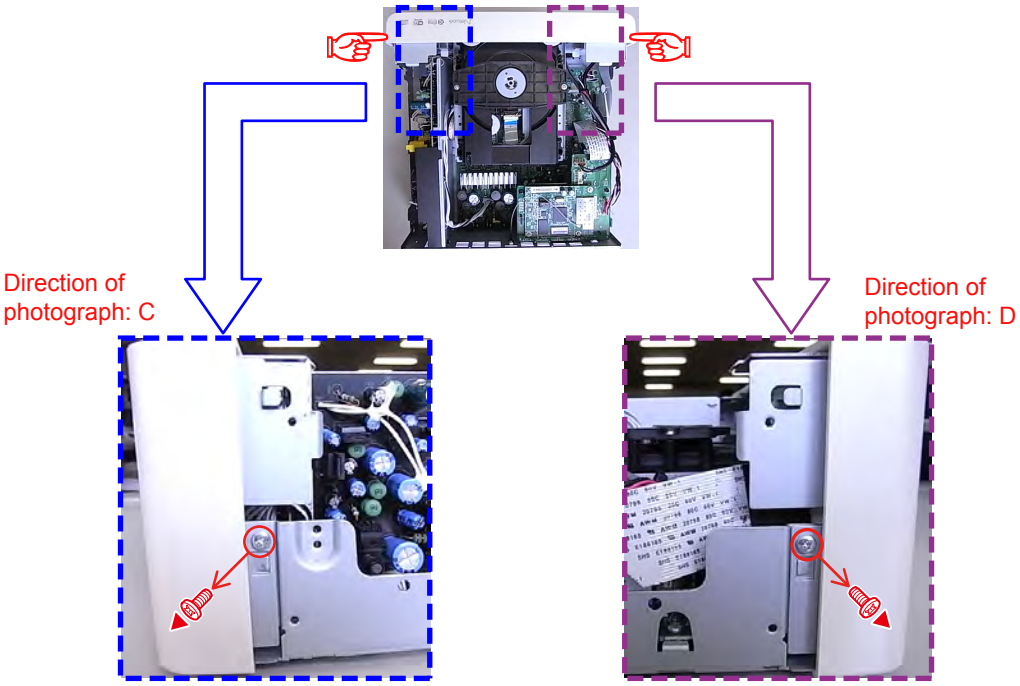

Please refer to "EXPLODED VIEW" for the disassembly method of each PCB included in FRONT PANEL ASSY.

5. MAIN PCB ASSY

Proceeding : SIDE PANEL → TOP COVER → DOOR → CD MECHA ASSY → FRONT PANEL ASSY → MAIN PCB ASSY

(1) Remove the screws.

Direction of photograph: A

(2) Remove the screws.

View from bottom

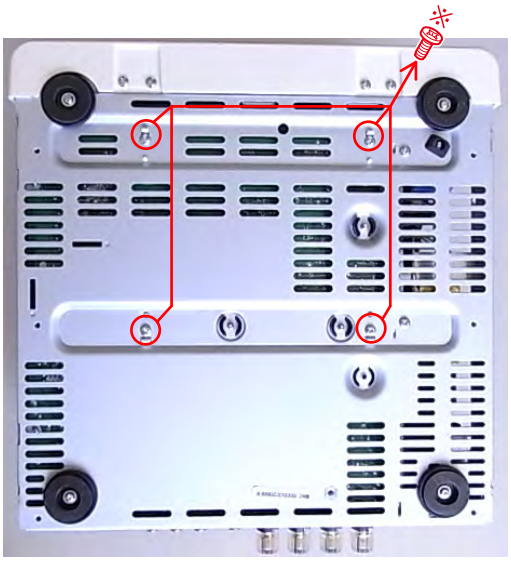

(3) Remove the SUPPORT MECHA.

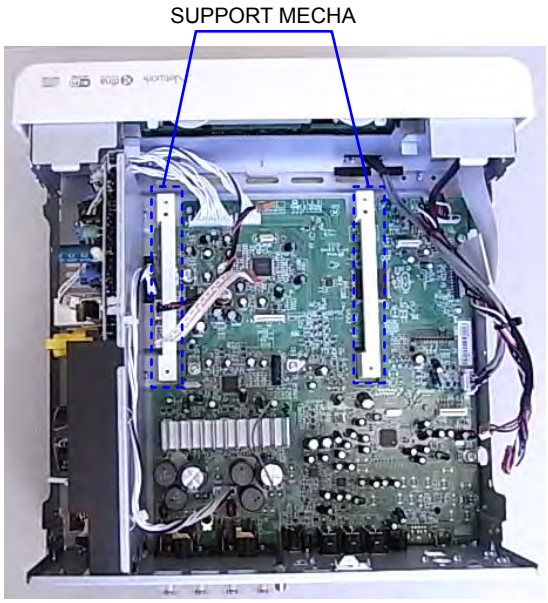

(4) Remove the screws, then disconnect the connector wire.

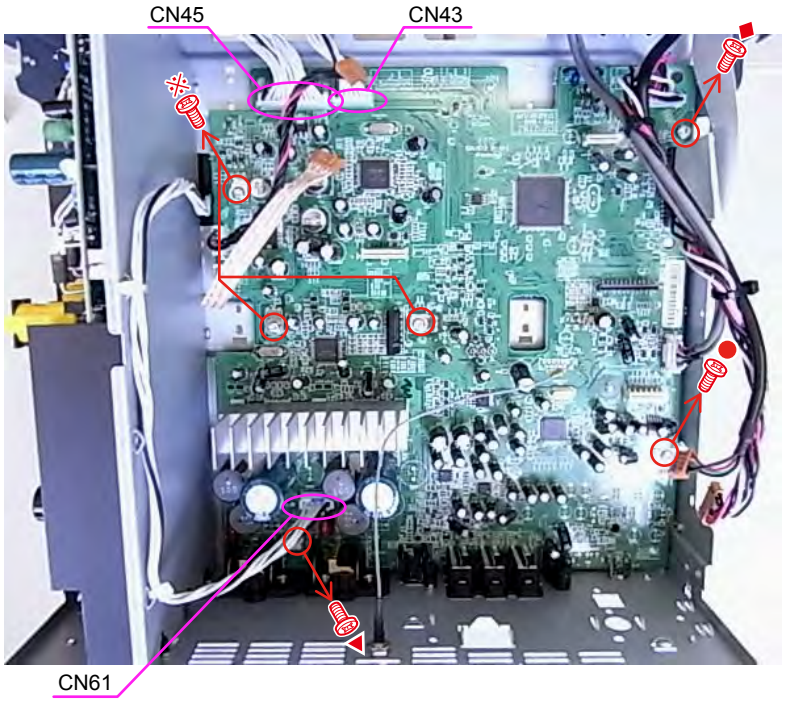

6. SMPS PCB ASSY

Proceeding : SIDE PANEL → TOP COVER → DOOR → FRONT PANEL ASSY → SMPC PCB ASSY

(1) Remove the screws.

View from bottom

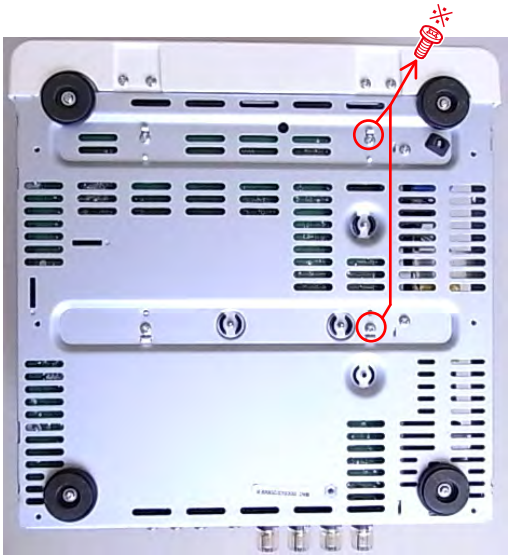

(2) Cut the wire clamp band, then disconnect the connector wires.

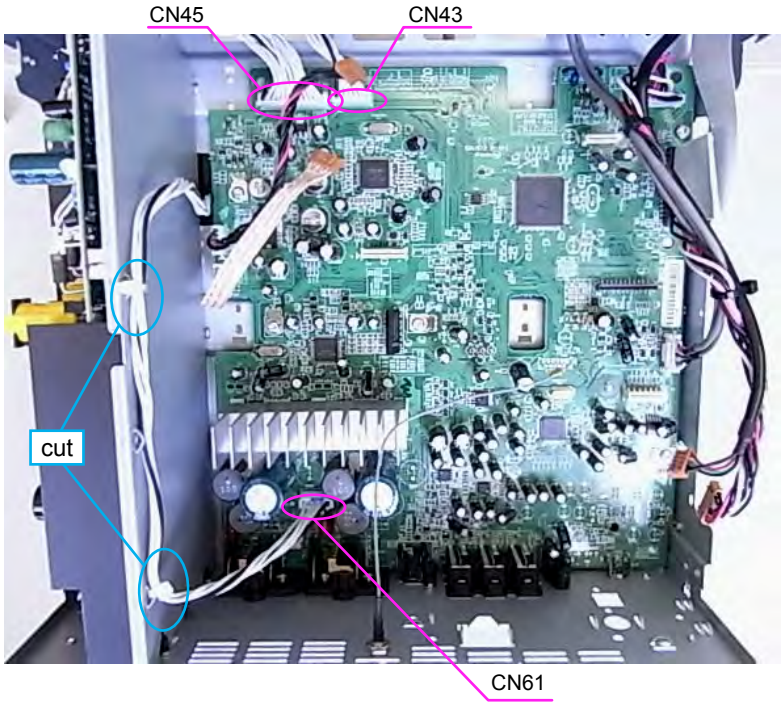

(3) Remove the screws.

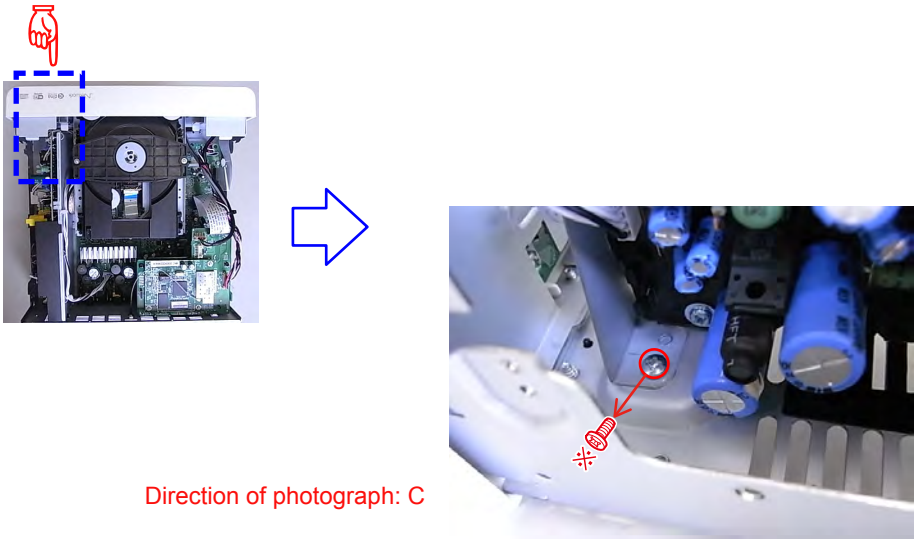

Direction of photograph: C

(4) Remove the screws.

Direction of photograph: A

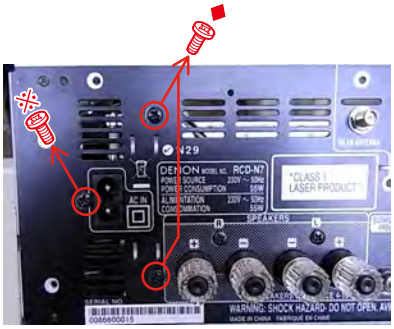

NOTE HANDLING AND REPLACEMENT OF THE LASER PICK-UP

1. Protection of the LD

Short a part of the LD circuit by soldering. After connection to a circuit, remove the short solder.

2. Precautions when handling the laser CD mechanism

- Handle the laser pick-up so that it is not exposed to dust.
- Do not leave the laser pick-up bare. Be sure to cover it.
- If dust adheres on lens of the pick-up, blow it off with a blower brush.
- Do not shock the laser pick-up.
- Do not watch the light of the laser pick-up.

3. Cautions on assembling and adjustment

- Be sure that to the bench, jig, head of soldering iron (with ceramic) and measuring instruments are well grounded.
- Workers who handle the laser pick-up must be grounded.
- The finished mechanism (prior to anchoring in the set) should be protected against static electricity and dust. The mechanism must be stored that damaging outside forces are not received.
- When carrying the finished mechanism, hold it by the chassis body
- For proper operation, storage and operating environment should not contain corrosive gases. For example H2S, SO2, NO2, CI2 etc. In addition storage environment should not have materials that emit corrosive gases especially from silicic, cyanic, formalin and phenol group. I the mechanism or the set, existence of corrosive gases may cause no rotation in motor.

4. Determining whether the laser pick-up is defective

- Check the Iop(Laser drive current). Check Iop in "SPECIAL MODE". (Refer to 20 page.)
- If the present Iop (current) value becomes more than 50mA, replace the Traverse unit with a new one.
- No mechanical adjustment is necessary after the replacement.

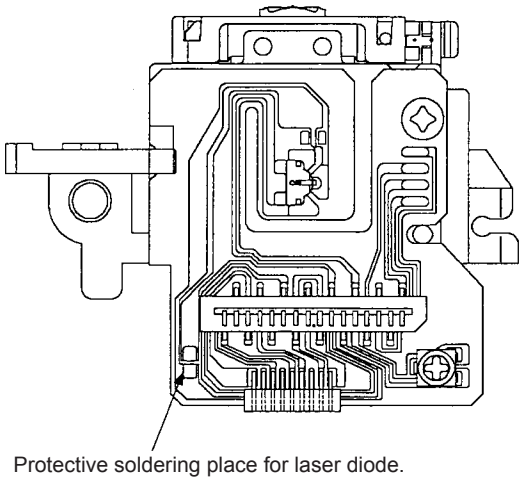

Protective soldering place for laser diode.

SPECIAL MODE

Special mode setting

Plug AC cord into power outlet while pressing buttons A and B.

Each button continue to press until the lit of ON/STANDBY.

No.	Mode	Button A	Button B	Contents
1	Initialization mode (Factory Reset)	VOLUME UP	CURSOR DOWN	Initializing. Factory Reset
2	Initialization mode (User Reset)	VOLUME UP	VOLUME DOWN	Initializing. (Contents User's Guide is published)
3	Version display	CURSOR UP	-	Version Display
4	CD test mode	ON/ STANDBY	OPEN/ CLOSE	Servo adjustment, Leaser current, ON time
5	Heat Run mode	ON/ STANDBY	SOURCE	Heat run
6	Product mode 1	VOLUME UP	CURSOR RIGHT	Factory use.
7	Prodcut mode 2	VOLUME UP	CURSOR LEFT	Factory use.
8	Protection history mode	CURSOR RIGHT	VOLUME DOWN	Protection history view and reset
9	Hidden serial number mode	-	-	Factory use.
10	Update mode (by disc)	VOLUME DOWN	CURSOR UP	Development/Fuctory use. The details cannot be disclosed.
11	DPMS update mode	SOURCE	OPEN/ CLOSE	DPMS Up date Mode
12	Update mode (by RS232C)	PLAY/ PAUSE	CURSOR LEFT	Development/Fuctory use. The details cannot be disclosed.
13	MAC Address rewrite mode	PLAY/ PAUSE	CURSOR DOWN	Development/Fuctory use. The details cannot be disclosed.
14	Update mode (display µ-com)	PLAY/ PAUSE	CURSOR RIGHT	Development/Fuctory use. The details cannot be disclosed.
15	Access to development server mode	PLAY/ PAUSE	CURSOR DOWN	Development/Fuctory use. The details cannot be disclosed.

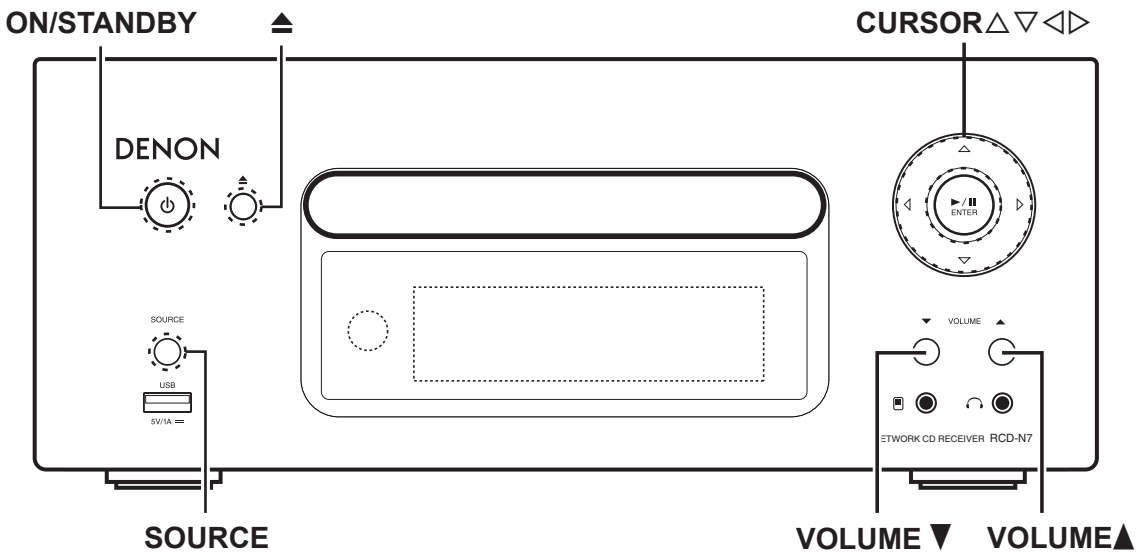

1. Initialization mode (Factory Reset)

Backup data initialization is carried out. Refer to Initialization Items.

After initialization, move on to nomal mode.

CAUTION

Version information (such as rewriting failed log) Clear.

Clear the history of protection.

"Initial value of laser current"and"The accumulated laser on time"not cleared.

Power failure flag is not cleared.

Startup display

All lights display(2 seconds) - All off display(2 seconds)
Power LED(red/Green) lighting(4 seconds)
"Factory Reset" displayed for 5 seconds.

Initialization Items (Default setting)

	Default
source	Internet Radio
TUNER(band)	FM
SDB	OFF
BASS	0 dB
TREBLE	0 dB
BALANCE	CENTER
DIMMER	100%
VOLUME	3
TUNER Preset	Clear all
Favorite list	Clear all
Clock	00:00 (JP/EU), 12:00AM (NA)
TIMER (EVERYDAY/ONCE)	Timer function CD
	ON TIME 0:00 (JP/EU), 12:00AM (NA)
	OFF TIME 0:00
SPK Response	ON
iPod mode	Browse mode
AUTO STANDBY	OFF
Protection history	NO PROTECT
Auto Adjust	Time Zone : 1h /Summer Time : 0h
Network setting	DHCP (On)
PC Language	chi(smpl)
Screen Saver	Off

2. Initialization mode (User Reset)

Backup data initialization is carried out. Refer to Initialization Items.

After initialization, move on to nomal mode.

CAUTION

The difference is the following two points.

Version information (such as rewriting failed log) not cleared.

History of protection not cleard.

Startup display

"Initialized" displayed for 5 seconds.

All lights display(2 seconds) - All off display(2 seconds)
Power LED(Green) lighting(4 seconds)

3. Version display

Menu items appear in the Add Version.Otherwise, normal operation.

To exit this mode, unplug the power cord.

Startup display

"Version" displayed for 5 seconds.

How to Display Version

Press SOURCE and Cursor △ , Cursor ▽ to select the Menu.
Press ►/❚❚ ENTER button.

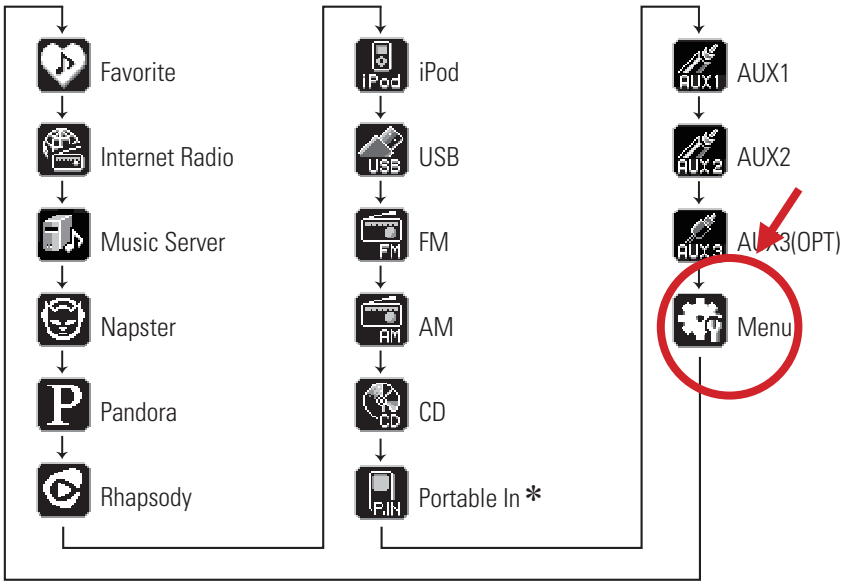

Pressing the ►/❚❚ ENTER button will be displayed below.

Press Cursor ▷

The version of the system-Up.

Press Cursor ▽

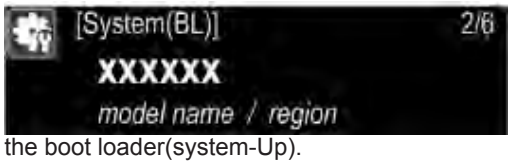

The version of the boot loader(system-Up).

Press Cursor ▽

The version of the display-Up.

Press Cursor ▽

The version of the boot loader(network-Up).

Press Cursor ▽

The version of the image(network-Up).

4. CD test mode

Startup display

"CD Test Mode" displayed for 5 seconds.

CDCD TEST MODE display

To exit this mode, unplug the power cord.

4.1. Before starting the test

Open the tray and disc.
Even if the disk is, the tray must let OPEN → CLOSE.
Press the SOURCE button to return to "0 CD TEST MODE".

4.2. Servo check

Press ►/ ❚❚ ENTER button.Execute the following steps.
* ►/ ❚❚ ENTER button continuously for over 1 second to switch directly to SUB CODE readout in step①.
Press the SOURCE button to return to "0 CD TEST MODE".

Press ►/ ❚❚ ENTER button

① LD ON

Press ►/ ❚❚ ENTER button

② FOCUS ON

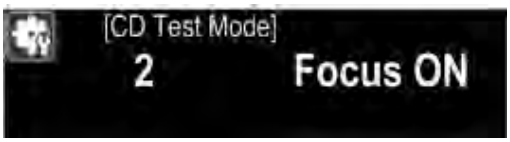

Press ►/ ❚❚ ENTER button

③ CLV ON

Press ►/ ❚❚ ENTER button

④ TRACKING ON

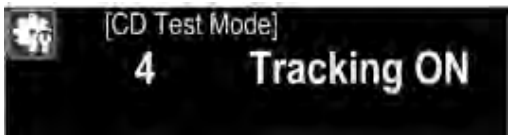

Press ►/ ❚❚ ENTER button

⑤ SUB CODE readout (playback sound output)
The BER (Block Error Rate) generated in 1second's time is displayed of the display.

Press Cursor ◁ button

Press Cursor ▷ button

Press Cursor ◁ button

Press Cursor ▷ button

Inner (IN), Ataru Amane (MID), outer (OUT) to play go to three places, make the error count.

4.3. Pickup movement

In the stop mode, pickup moves in FWD (outwards) or REV (inwards) direction when Cursor ▷ or Cursor ◁ button pressed.
Pickup movement stops when button released.(Pickup moves while button is pressed.)
When Cursor ◁ button pressed, move to stop operation after detection that inner switch has turned on.

4.4. All servo on and auto adjustment.

When Cursor △ button is pressed, all servos turn on, auto adjustment is performed and switch to playback operation. (Playback sound output)

Stop (stop to the playback state after auto adjustment)

When SOURCE button is pressed, play operation and servo stop. The following will be displayed.
After stopping, conduct reading of auto adjust values.

Stop (stop to the playback state after auto adjustment)

When Cursor △/ ▽ button is pressed, the adjustment values are displayed in the following order.
①FOCUS BALANCE
②FOCUS GAIN
③TRACKING BALANCE
④TRACKING GAIN
⑤FOCUS OFFSET
⑥TRACKING OFFSET
⑦RFRP
(Caution) If you have not completed the adjustment, the value is not correct.

4.5. All servo on and auto adjustment.

When VOLUME ▲ button is pressed for over 1 second while the RCD-N7 is in the CD TEST MODE, the laser turns on and the laser current is measured.

The laser drive current undergoes A/D conversion for calculation.
The current value is updated every 3 seconds.
Press the SOURCE button, CD TEST MODE display reappears.
Stored data is not cleared, even when the RCD-N7 is reset(Factory/User).

Overwriting the stored data

When the ►/ ❚❚ ENTER button is pressed for over 5 seconds while the laser current is displayed, thecurrent value is stored in the EEPROM (overwriting the stored data).

Once rewriting is completed, the display in "Laser current display" reappears.
Rewriting is performed upon shipment from the factory and when the mechanism is replaced.

4.6. Accumulated laser on time display

When the Volume ▼ button is pressed while the RCD-N7 is in the "CD TEST MODE"displayed, the accumulated laser on time is displayed.

The laser drive times are added and the result is displayed.
One count corresponds to 10 minutes.The accumulated laser on time is displayed in hours.Displays up to 10922 hours.
Press the SOURCE button, CD TEST MODE display reappears.
The count values are not cleared, even when the set is reset (Factory/User).

Count value is reset

When the ►/ ❚❚ ENTER button is pressed for over 5 seconds while the accumulated laser on time is displayed, the count value is reset.

Count value is reset upon shipment from the factory and when the mechanism is replaced.

5. CD heat run mode

Startup display

"Heatrun Mode" displayed for 5 seconds.CD heat run mode

Press the Cursor △/ ▽ button to switch the mode. (H.R. Normal, H.R. Short, H.R. Chacking)
After loading the disc, press ►/ ❚❚ ENTER button.
While heat run, the operation of each button is not valid
If an error occurs, display the error and stop operation at that point.Refer to Heat run error coad table.
To exit this mode, unplug the power cord.

5.1. Normal heat run mode

Playing from the first track to last track on disc. After disc playback has finished, then tray open and close. And playback again.
The heat run repetition no. is incremented (increased by 1) when the tray is opened.
Repeat this operation.
[H.R. Normal] displayed.

Select "H.R.Normal", and press ►/ ❚❚ ENTER button.
Press the Cursor △ button to display the count.

5.2. Heat run Short mode

Playing last track on disc. After disc playback has finished, then tray open and close. And playback again.
The heat run repetition no. is incremented (increased by 1) when the tray is opened.
Repeat this operation.
[H.R. Short] displayed.

Select "H.R.Short", and press ►/ ❚❚ ENTER button.
Press the Cursor △ button to display the count.

5.3. Heat run chacking mode

TOC read the CD, the first song disk search, open / closed later, and again read TOC.
The heat run repetition no. is incremented (increased by 1) when the tray is opened.
Repeat this operation.
[H.R. Chacking] displayed.

Select "H.R.Chacking", and press ►/ ❚❚ ENTER button.
Press the Cursor △ button to display the count.

5.4. Error display

Press the Cursor △/ ▽ to display the error information.

Heat run error code table

Error Code	Details of Error code
E1-00	Disc cannot be detected
E1-01	Tracking offset adjustment not possible
E1-02	Focus offset adjustment not possible
E2-00	Focus servo dropped during playback.
E2-01	Focus servo dropped during searching.
E2-03	Focus servo dropped during TOC reading.
E2-05	Focus servo dropped during manual search.
E2-10	Subcode can no longer be read during playback
E2-11	Subcode can no longer be read during searching
E2-12	Subcode can no longer be read during TOC reading
E2-14	Subcode cannot be read during pause
E2-15	Subcode cannot be read during manual search
E3-00	TOC could not be read within specified time
E3-01	PVD/SVD analysis could not be completed within specified time
E4-04	Search time out (The search was not completed within the stipulated time)
E4-05	Decoder bus error (Error in communications with CD decoder)
E5-00	Inner switch not on
E6-00	Inner switch not off
E8-00	Tray is not opened by the specified time.
E8-01	Tray is not closed by the specified time.
E9-00	CD Microprocessor error
E9-01	Other error

6. Product Mode 1

Startup display

"Product Mode1" displayed for 5 seconds.

Tested during production to perform the following settings automatically.
Tuner Preset
To exit this mode, unplug the power cord.

7. Product Mode 2

Startup display

"Product Mode2" displayed for 5 seconds.

Tested during production to perform the following settings automatically.
Sleep setting : 1 minutes
Auto Standby :1 minutes
Sleep setting and timer started.
Auto Standby to set up and will stand under the following conditions.

Auto Standby Conditions

CD : No Disc, Tray Open, Unsupported Disc or continue no operation and Stop state.
USB/iPod : No Connection or Unsupported Disc or continue no operation and Stop state.
Network : No Connection or Unsupported Disc or continue no operation and Stop state.
AUX3(OPT) : No Input(unlock)
Portable In : No Input

To exit this mode, unplug the power cord.

8. Protection history display mode

Startup display

"Detect Protection" displayed for 5 seconds.

To exit this mode, unplug the power cord.

No history found

Thermal protection

Speaker short protection

Potential difference across the terminal detects that the speaker was more than DC9V

DC protect 1

Overvoltage of +B/-B

DC protect 2

Short of '+B/-B

Over current

Over-current detection digital amplifier

SubWoofer DC protect

Over voltage

Supply voltage is detected beyond the provisions

Protection history is reset.

When the Cursor △ button is pressed for over 5 seconds while the protection history is displayed, the count value is reset.

After the reset is complete, the display “No Protection“.

Protection history is not cleared, even when the set is reset (Factory/User).

9. Update mode (by disc)

Firmware update disc by.
When you replace the RCD-N7 WLAN MODULE (8R1821000100S), you need software updates.
Refer to [VERSION UPGRADE PROCEDURE OF FIRMWARE "1. How to update by disc"].
Upgrade by DPMS. This mode describes a display only.
To exit this mode, unplug the power cord.

Startup display

"Disc Update Mode" displayed for 5 seconds.

The tray will open.

Insert disc.

The following states are displayed

Display update file.

Updating display

Error code table

Error Code	Details of Error code
01	Tray Open/Close failure
02	No Disc
03	Disc error(TOC not read)
04	No update file
05	Update file read error
10	Update file check sum error
11	Erase failure
12	Write failure
13	Verify uncorrect
20	Update file check sum error
21	Erase failure
22	Write failure
23	Verify uncorrect
24	Communication error
30	Update failure check sum error
31	Erase failure
32	Writef failure
33	Verify failure
34	Communication error
B2	DM8x0 firmware rewrite error information received

10.DPMS UP date mode

Update the firmware of DPMS.
Refer to [VERSION UPGRADE PROCEDURE OF FIRMWARE "2. How to update by DPMS"].

Error code table

- Preparation operation rewritten, Update error code checking. (Check ETHERNET unit) ⚠6

Error Code	Details of Error code	Coping strategies
01	Login failed(DPMS Access Login Incorrect notification)	Reset and update again. Carry out the update in an environment that has little network load.
02	Login failed(DPMS Access Server Busy information)	Carry out the update in an environment that has little network load.
03	Login failed(DPMS Access link failure information)	Check the network connection. Carry out the update in an environment that has little network load.
04	Firm Info response acquisition error recived	Check the network connection. Carry out the update in an environment that has little network load.
05	Firm Info response acquisition TimeOut	Check the network connection. Carry out the update in an environment that has little network load.
06	All Firm Info response acquisition error recived	Check the network connection. Carry out the update in an environment that has little network load.
07	All Firm Info response acquisitionTimeOut	Check the network connection. Carry out the update in an environment that has little network load.
08	Main Firm Info response acquisition error recived	Check the network connection. Carry out the update in an environment that has little network load.
09	Main Firm Info response acquisition TimeOut	Check the network connection. Carry out the update in an environment that has little network load.
0A	DownLoad failed ((NG)information recieved)	Check the network connection. Carry out the update in an environment that has little network load.
0B	DownLoad failed((ServerBusy) information recieved)	Check the network connection. Carry out the update in an environment that has little network load.
0C	DownLoad failed((connection failed)information recived)	Check the network connection. Carry out the update in an environment that has little network load.

• Firm error codes at the main microprocessor rewritten. (Check main microprocessor) ⚠6

Error Code	Details of Error code	Coping strategies
10	Firm Info response acquisition TimeOut(Main rewrite Firmware recived failure(TimeOut))	Turn off and on the power. Updating starts automatically.
11	Firm Info response acquisition recived error(Main rewrite Firmware recived failure(Error)	Turn off and on the power. Updating starts automatically.
12	Firm Info response acquisition recived error (Main rewirte Firmware recived data incorrect(CheckSumError))	Turn off and on the power. Updating starts automatically.
13	Rewrite failure (BlockErase failued before Main rewriting)	Turn off and on the power. Updating starts automatically.
14	Rewrite failure (BlockWrite failued before Main rewriting)	Turn off and on the power. Updating starts automatically.
15	Rewrite failure (Verify incorrect after Main rewriting)	Turn off and on the power. Updating starts automatically.
36	Login failure(DPMSAccess Login incorrect infomation)	Carry out the update in an environment that has little network load.
37	Login failure(DPMSAccess Server busy infomation)	Carry out the update in an environment that has little network load.
38	Login failure(DPMSAccess connection failed infomation)	Check the network connection. Carry out the update in an environment that has little network load.
39	Login failure(DPMSAccess access TimeOut)	Check the network connection. Carry out the update in an environment that has little network load.
3A	DownLoad failure(Download error (NG)information recieved)	Turn off and on the power. Updating starts automatically. Carry out the update in an environment that has little network load.
3B	DownLoad failure(Download error (ServerBusy) information recieved)	Turn off and on the power. Updating starts automatically. Carry out the update in an environment that has little network load.
3C	DownLoad failure(Download error (connection failed) information recived)	Turn off and on the power. Updating starts automatically. Carry out the update in an environment that has little network load.

• Firm error codes at the display microprocessor rewritten.(Check display microprocessor) ⚠6

Error Code	Details of Error code	Coping strategies
50	After download request, Login Failed	Carry out the update in an environment that has little network load.
51	After download request, Login Failed	Carry out the update in an environment that has little network load.
52	After download request, Login Failed	Check the network connection. Carry out the update in an environment that has little network load.
54	Error receiving response FirmInfo acquisition	Turn off and on the power. Updating starts automatically. Carry out the update in an environment that has little network load.
55	FirmInfo Get Response TimeOut	Turn off and on the power. Updating starts automatically. Carry out the update in an environment that has little network load.
56	Failure of DownLoad	Turn off and on the power. Updating starts automatically. Carry out the update in an environment that has little network load.
57	Failure of DownLoad	Turn off and on the power. Updating starts automatically. Carry out the update in an environment that has little network load.
58	Failure of DownLoad	Turn off and on the power. Updating starts automatically. Carry out the update in an environment that has little network load.
5A	C command error	Turn off and on the power. Updating starts automatically.
5B	L command error	Turn off and on the power. Updating starts automatically.
5C	Receive error update data	Turn off and on the power. Updating starts automatically.
5D	Receive error update data	Turn off and on the power. Updating starts automatically.
5E	Receive error update data	Turn off and on the power. Updating starts automatically.
5F	Receive error update data	Turn off and on the power. Updating starts automatically.
60	P command error	Turn off and on the power. Updating starts automatically.
61	I command error	Turn off and on the power. Updating starts automatically.
62	Launch failure	Turn off and on the power. Updating starts automatically.
70	T command error	Turn off and on the power. Updating starts automatically.

• DM8x0 system Firm error codes when rewriting. (Check ETHERNET unit) ⚠6

Error Code	Details of Error code	Coping strategies
A0	Net not connected	Check the network connection. Carry out the update in an environment that has little network load.
A1	Net Connection TimeOut can not get status	Check the network connection. Carry out the update in an environment that has little network load.
A2	Login failed	Check the network connection. Carry out the update in an environment that has little network load.
A3	Login failed	Check the network connection. Carry out the update in an environment that has little network load.
A4	Login failed	Check the network connection. Carry out the update in an environment that has little network load.
A6	Error receiving response FirmInfo acquisition	Turn off and on the power. Updating starts automatically. Carry out the update in an environment that has little network load.
A7	FirmInfo Get Response TimeOut	Turn off and on the power. Updating starts automatically. Carry out the update in an environment that has little network load.
A8	Net not connected	Check the network connection. Carry out the update in an environment that has little network load.
A9	Net Connection TimeOut can not get status	Check the network connection. Carry out the update in an environment that has little network load.
AA	After download request, Login Failed	Check the network connection. Carry out the update in an environment that has little network load.
AB	After download request, Login Failed	Check the network connection. Carry out the update in an environment that has little network load.
AC	After download request, Login Failed	Check the network connection.Carry out the update in an environment that has little network load.
AE	Failure of DownLoad	Turn off and on the power. Updating starts automatically. Carry out the update in an environment that has little network load.
AF	Failure of DownLoad	Turn off and on the power. Updating starts automatically. Carry out the update in an environment that has little network load.
B0	Failure of DownLoad	Turn off and on the power. Updating starts automatically. Carry out the update in an environment that has little network load.
B2	Update error	Turn off and on the power. Updating starts automatically. Carry out the update in an environment that has little network load.

Failure to update, After the move again 8x0 selfe display retry processing

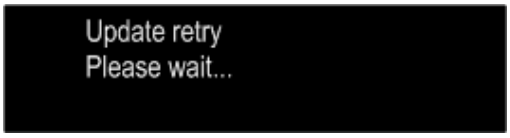

11. Update mode (by RS232C)

Firmware update using PC via RS232C
Upgrade by DPMS. No display.
To exit this mode, unplug the power cord.

12. MAC Address rewrite mode

Rewriting the MAC address mode.
Production / development for, there is no detailed description.
To exit this mode, unplug the power cord.

13. Update mode (display µ-com)

Rewriting of display microprossecor.
Production / development for, there is no detailed description.
To exit this mode, unplug the power cord.

14. Access to development server mode

Production / development for, there is no detailed description.
To exit this mode, unplug the power cord.

ABOUT REPLACE THE MICROPROCESSOR WITH A NEW ONE

When replaced of the U-PRO (Microprocessor) or the Flash ROM, confirm contents of the following.

PWB Name	Ref. No.	Description	After replaced	Remark
DISPLAY	IC81	R5F64169DFD	**B**	
MAIN	IC11	R5F64169DFD	**B**	

After replaced

A : Mask ROM (With software). No need write-in of software to the microprocessor.

B : Flash ROM (With software). Usually, no need write-in of software. But, when the software was updated, you should be write-in of the new software to the microprocessor or flash ROM. Please check the software version.

C : Empty Flash ROM (Without software). You should be write-in of the software to the microprocessor or flash ROM. Refer to "Update procedure" or "writing procedure", when you should be write-in the software.

VERSION UPGRADE PROCEDURE OF FIRMWARE

NOTE: When you replace the RCD-N7 WLAN MODULE (8R1821000100S), you need software updates. Refer to [**CAUTION IN SERVICING** "ABOUT REPLACE THE WLAN MODULE WITH A NEW ONE"]. ⚠5

1. How to update by DISC ⚠5

1.1. Procedure of making CD-R

(1) Please download zipped file, and unzip on your PC.

For E3 : RCDN7E3_xxxxxxxxxxxx-xxxx.zip
For E2 : RCDN7E2_ xxxxxxxxxxxx-xxxx.zip
For E1C : RCDN7E1C_ xxxxxxxxxxxx-xxxx.zip

(2) The following 3-file will be appeared.

RCD-N7_SYS_000xxx.BIN
RCD-N7_OEL_0000xx.BIN
and
RCD-N7_BCI_CREUNM.BIN(E3)
or
RCD-N7_BCI_CRNANM.BIN(E2)
or
RCD-N7_BCI_CRNANM.BIN(E1C)
or
RCD-N7_BCI_CRJPNM.BIN(JP)

(3) Please burn 3-file to CD-R with the following conditions.

① Multi Session：No
② File System：ISO9660+Joliet
③ Mode: MODE1
④ Writing speed: 8~16 speed (according ability of CD-R)
⑤ Writing method: Disc at Once (Finalize(Close)

1.2. Procedure of updating

Pressing the VOLUME▼ and ⏮ buttons for simultaneously, plug the AC cord into a power outlet.

(1) "Disc Update Mode" is indicated approximately 5 seconds.

(2) Open the Tray.

(3) Please put CD-R on Tray, and press ⏏ button.

(4) After loading CD-R, version number of firmware will be indicated.

xxxxxx : Version number

(5) If there is no any firmware of updating, [xxxxxx="None"] will be indicated.
Please confirm version of each firmware by Cursor ▲ / ▼ buttons.

(6) Press "Enter" button, unit will update firmware automatically.
Display will be indicated procedure of updating firmware.

First line : Version of updating firmware/ a number of firmware
Second line : Rest time and progress of updating (….%)
Third line : Name of Microprocessor and Version

※ while updating firmware, any buttons of R/C and Front panel are not worked.

---Order of updating---

① Network microprocessor (Boot Loader)
② Network microprocessor (Image)
③ Microprocessor for indication
④ Microprocessor for system

(7) After 27 minutes, unit will be updated completely, and open the tray automatically.

(8) Remove CD-R, and pull out AC cord from AC wall socket.

(9) Please initialize unit after updating.

① Please insert AC cord to AC wall socket while pressing Volume▲ button and Volume▼ button.
② After power LED is indicated, remove your finger.
③ "Initialize" will be indicated 5 seconds.
④ Pull out AC cord from AC wall socket.

(10) Updated unit completely.

1.3. Trouble Shooting

If you find the following Error codes, please solve root cause of malfunction.

(1) If updating is failed, the following ERROR indication is displayed.

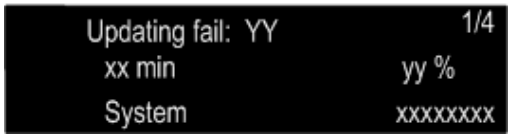

First line (Error number): "Updating fail: YY, n/N"YY: Error number
Second line (Time on error): "xx min yy%"
Third line (name of firmware)

Error code table

Error Code	Details of Error code
① Error before updating	
01	Tray Open/Close failure
02	No Disc
03	Disc error(TOC not read)
04	No update file
05	Update file read error
② Error at writing System Microprocessor	
10	Update file check sum error
11	Erase failure
12	Write failure
13	Verify incorrect
③ Error at writing Display Microprocessor	
20	Update file check sum error
21	Erase failure
22	Write failure
23	Verify incorrect
24	Communication error
④ Error at writing DM8x0	
30	Update failure check sum error
31	Erase failure
32	Write failure
33	Verify incorrect
34	Communication error
B2	DM8x0 firmware rewrite error information received

1.4. Notice of updating firmware

(1) When unit is updating firmware on item "**1.2. Procedure of updating** (6)", do not turn off the power, or pull out AC cord from AC wall socket.

(2) **If power supply stop to supply microprocessor, unit will be broken.**

① When AC cord is pulled while updating System firmware.
⇒ System microprocessor will be broken. Please replace it.

② When AC cord is pulled while updating Display firmware.
⇒ Display microprocessor will be broken. Please replace it.

③ When AC cord is pulled while updating DM870Net (IMG) firmware.
⇒ Please update firmware by CD-R again.

(3) When updating is not finished (not 100%), but tray opens automatically over 27 minutes. Probably unit will be updated firmware completely, therefore please confirm version of firmware. If no, please update again.

(4) After 35 minutes, try does not open or try does open with error indication, please update firmware of unit with CD-R again.

2. How to update by DPMS

You can update by downloading the latest firmware from the Internet.

2.1. Connecting to the Network

(1) System Requirement
- Internet Connection by Broadband Circuit
- Modem
- Router
- Ethernet cable (CAT-5 or greater recommended)

(2) Setting

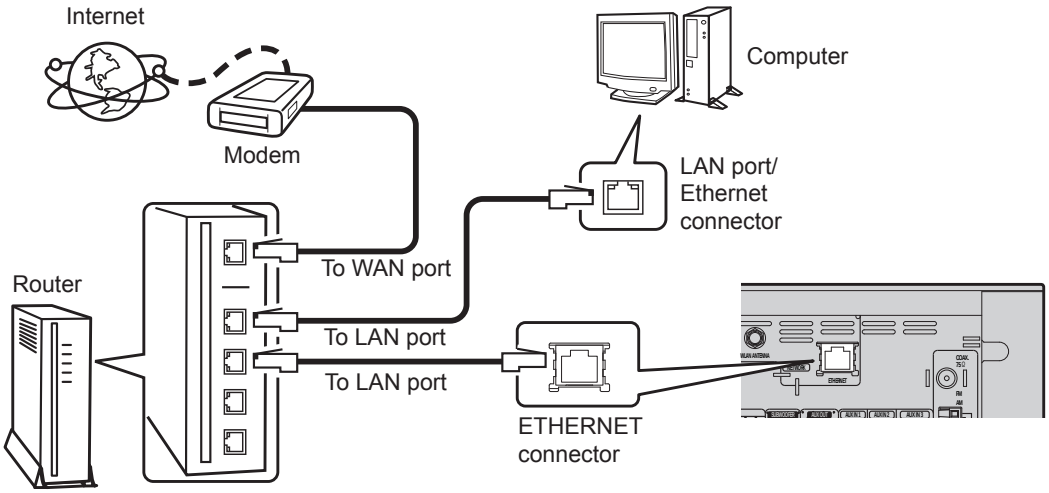

2.2. Check for Update and Update

Check if the latest firmware exists. You can also check approximately how long it will take to complete an update.

(1) Turn on the power pressing ON/STANDBY button.

(2) Press SOURCE and Cursor △/ ▽ buttons. Select the Menu, then press ►/❚❚ ENTER button.
- Press Cursor △/ ▽ buttons select to Others. Press ►/❚❚ ENTER button.
- Press Cursor △/ ▽ buttons select to Firmware Update. Press ►/❚❚ ENTER button.
- Press Cursor △/ ▽ buttons select to CHECK For UPDATE.

(3) Press the ►/❚❚ ENTER button.
- The latest version of the firmware uploaded to the web is displayed.
- If the latest firmware version is on the web, proceed to (4).
- If the latest firmware is already installed, press the SOURCE button to close the Update menu.

(4) Press ►/❚❚ ENTER button. Select "YES", then press ►/❚❚ ENTER button.

(5) Firmware Update will be started.

--- Cautions on Firmware Update ---

- In order to use these functions, you must have the correct system requirements and settings for a broadband Internet connection.
- Do not turn off the power until updating is completed.
  Even with a broadband connection to the Internet, approximately about 1 hour is required for the updating procedure to be completed.
  Once updating starts, normal operations on the RCD-N7 cannot be performed until updating is completed.
  Also, setting items may be initialized.
  Make a note of the settings before updating, and set them again after updating.

TROUBLE SHOOTING

1. OLED dosen't light

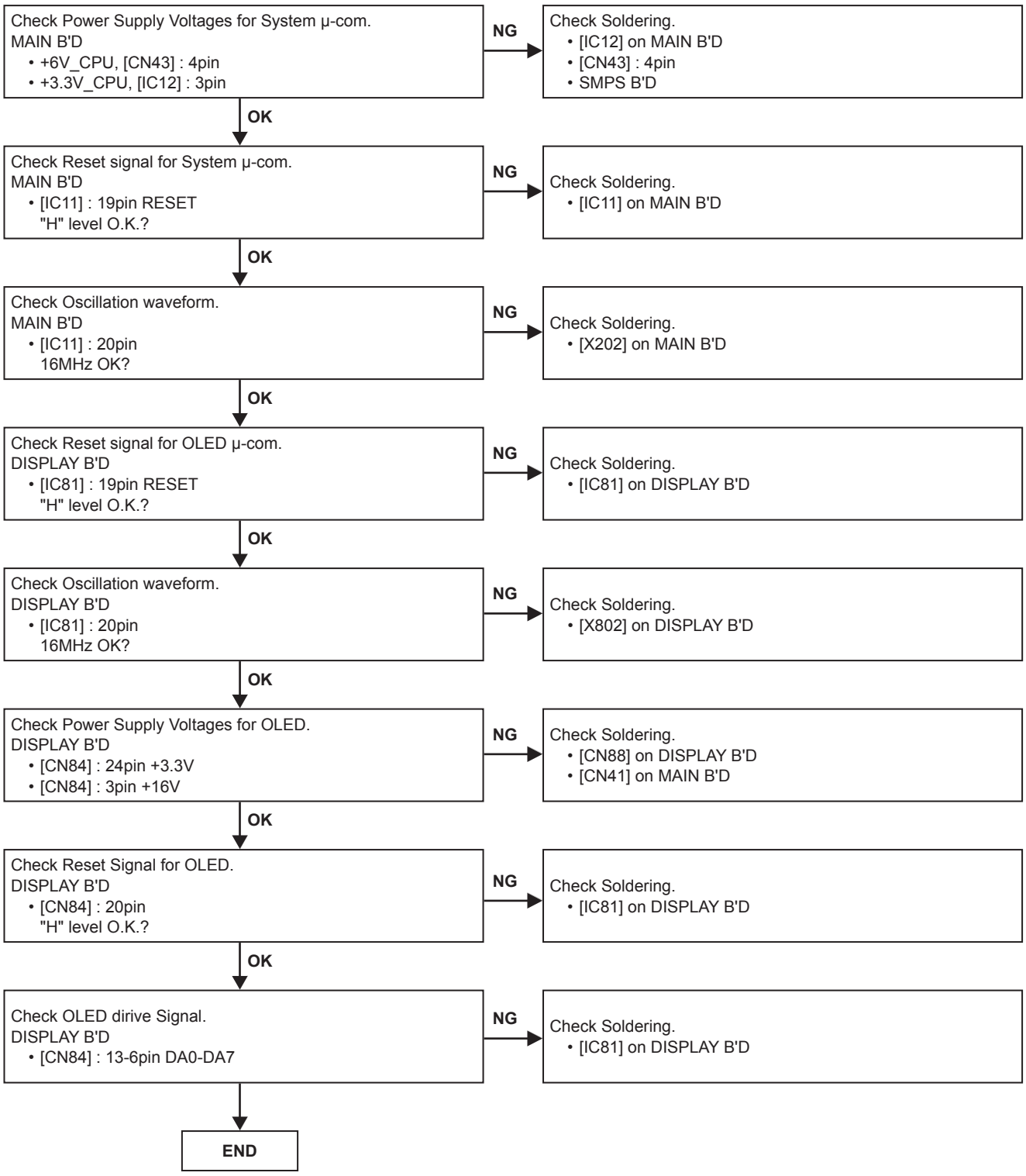

2. No Sound,Noise generated

2.1. COMMON

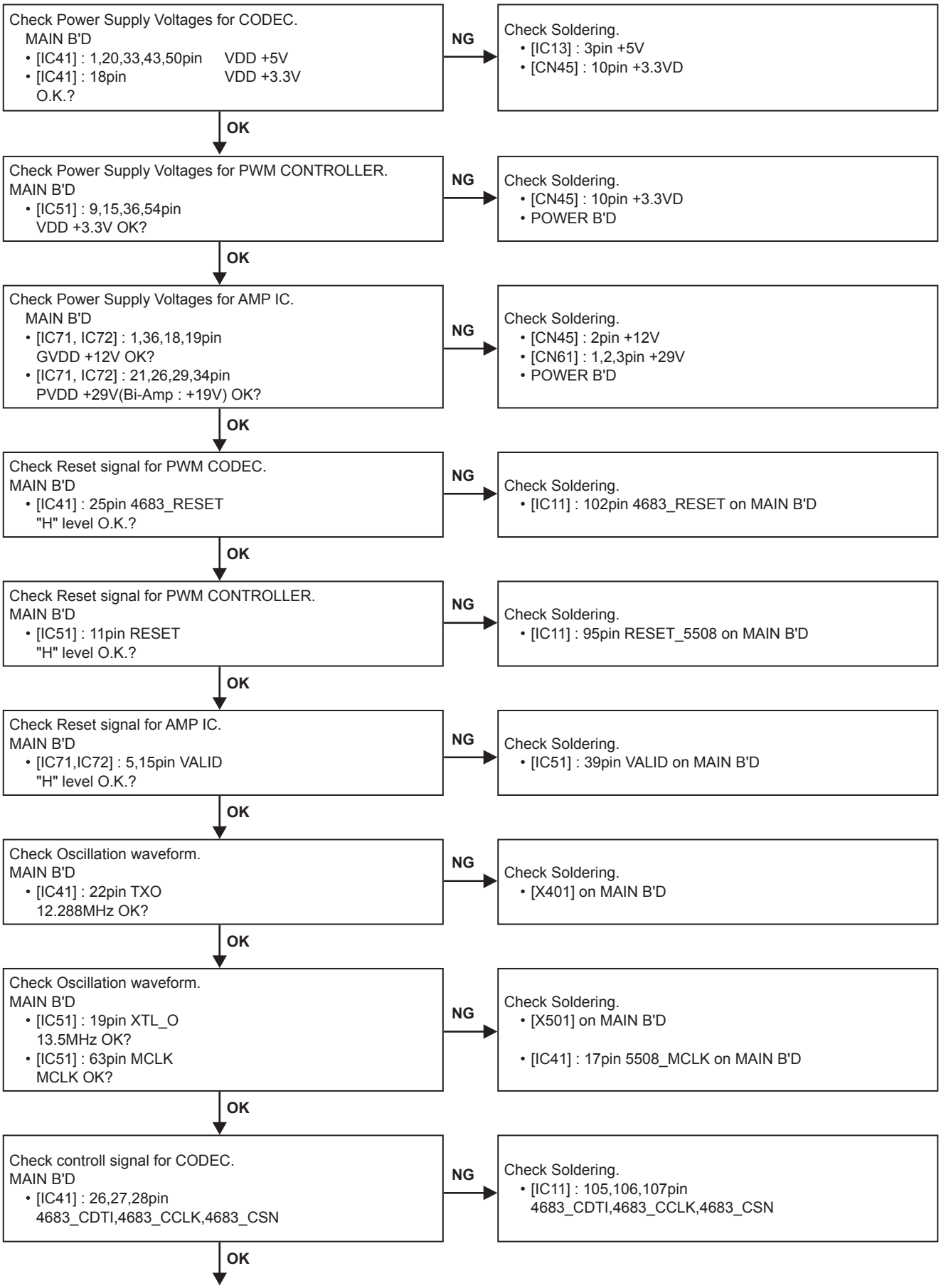

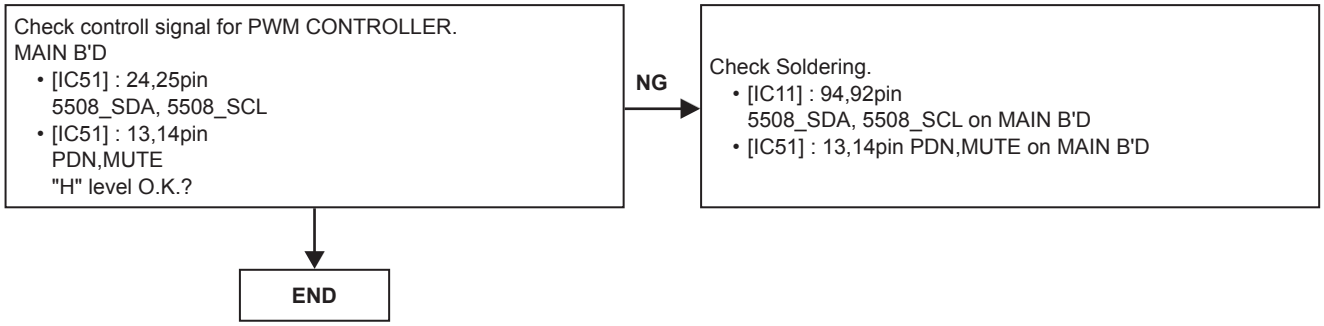
Check controll signal for PWM CONTROLLER.
MAIN B'D
• [IC51] : 24,25pin
5508_SDA, 5508_SCL
• [IC51] : 13,14pin
PDN,MUTE
"H" level O.K.?
NG
Check Soldering.
• [IC11] : 94,92pin
5508_SDA, 5508_SCL on MAIN B'D
• [IC51] : 13,14pin PDN,MUTE on MAIN B'D
END

2.2. CD PLAY

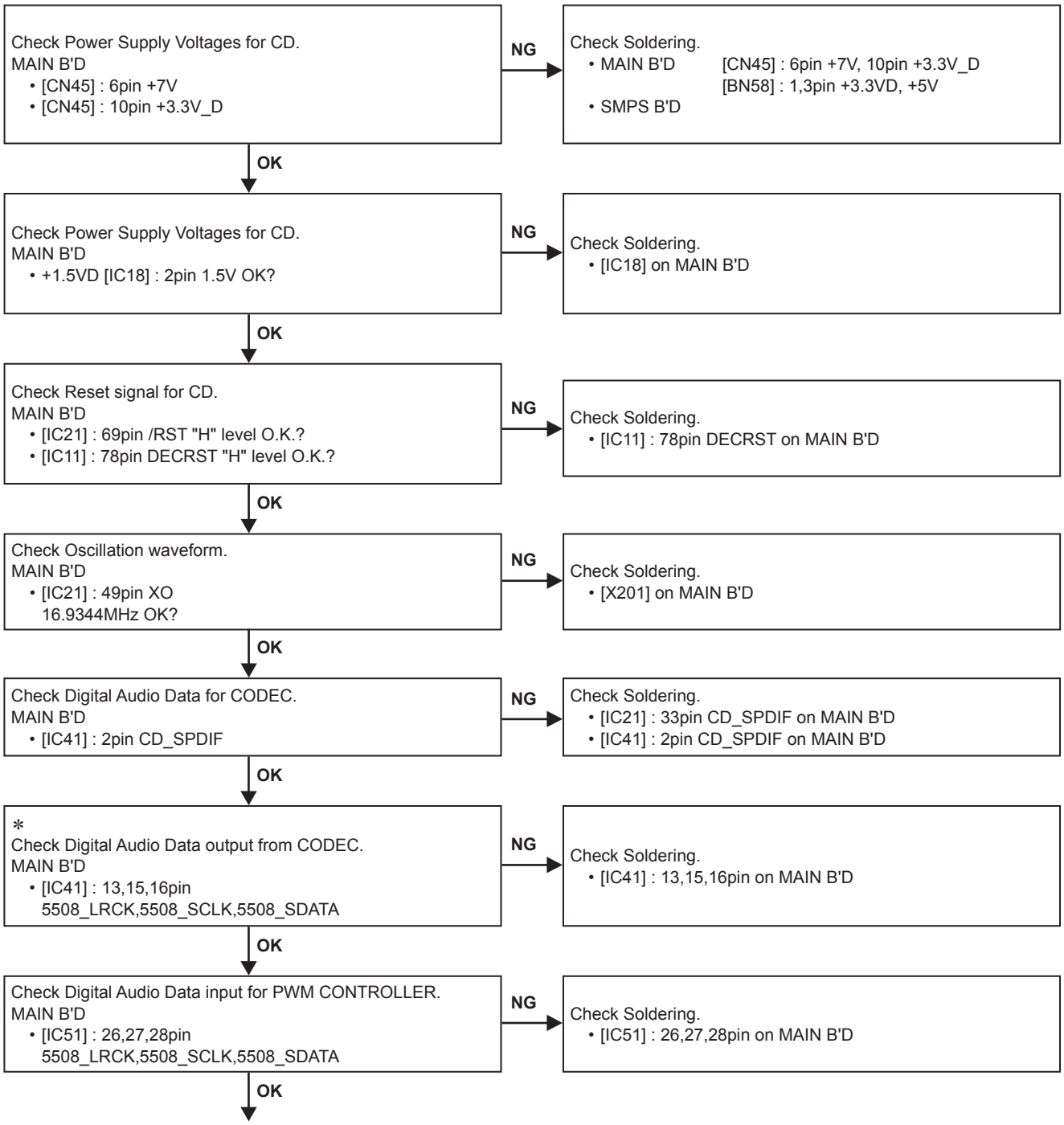
Check Power Supply Voltages for CD.
MAIN B'D
• [CN45] : 6pin +7V
• [CN45] : 10pin +3.3V_D
NG
Check Soldering.
• MAIN B'D [CN45] : 6pin +7V, 10pin +3.3V_D
[BN58] : 1,3pin +3.3VD, +5V
• SMPS B'D
OK
Check Power Supply Voltages for CD.
MAIN B'D
• +1.5VD [IC18] : 2pin 1.5V OK?
NG
Check Soldering.
• [IC18] on MAIN B'D
OK
Check Reset signal for CD.
MAIN B'D
• [IC21] : 69pin /RST "H" level O.K.?
• [IC11] : 78pin DECRST "H" level O.K.?
NG
Check Soldering.
• [IC11] : 78pin DECRST on MAIN B'D
OK
Check Oscillation waveform.
MAIN B'D
• [IC21] : 49pin XO
16.9344MHz OK?
NG
Check Soldering.
• [X201] on MAIN B'D
OK
Check Digital Audio Data for CODEC.
MAIN B'D
• [IC41] : 2pin CD_SPDIF
NG
Check Soldering.
• [IC21] : 33pin CD_SPDIF on MAIN B'D
• [IC41] : 2pin CD_SPDIF on MAIN B'D
OK
*
Check Digital Audio Data output from CODEC.
MAIN B'D
• [IC41] : 13,15,16pin
5508_LRCK,5508_SCLK,5508_SDATA
NG
Check Soldering.
• [IC41] : 13,15,16pin on MAIN B'D
OK
Check Digital Audio Data input for PWM CONTROLLER.
MAIN B'D
• [IC51] : 26,27,28pin
5508_LRCK,5508_SCLK,5508_SDATA
NG
Check Soldering.
• [IC51] : 26,27,28pin on MAIN B'D
OK

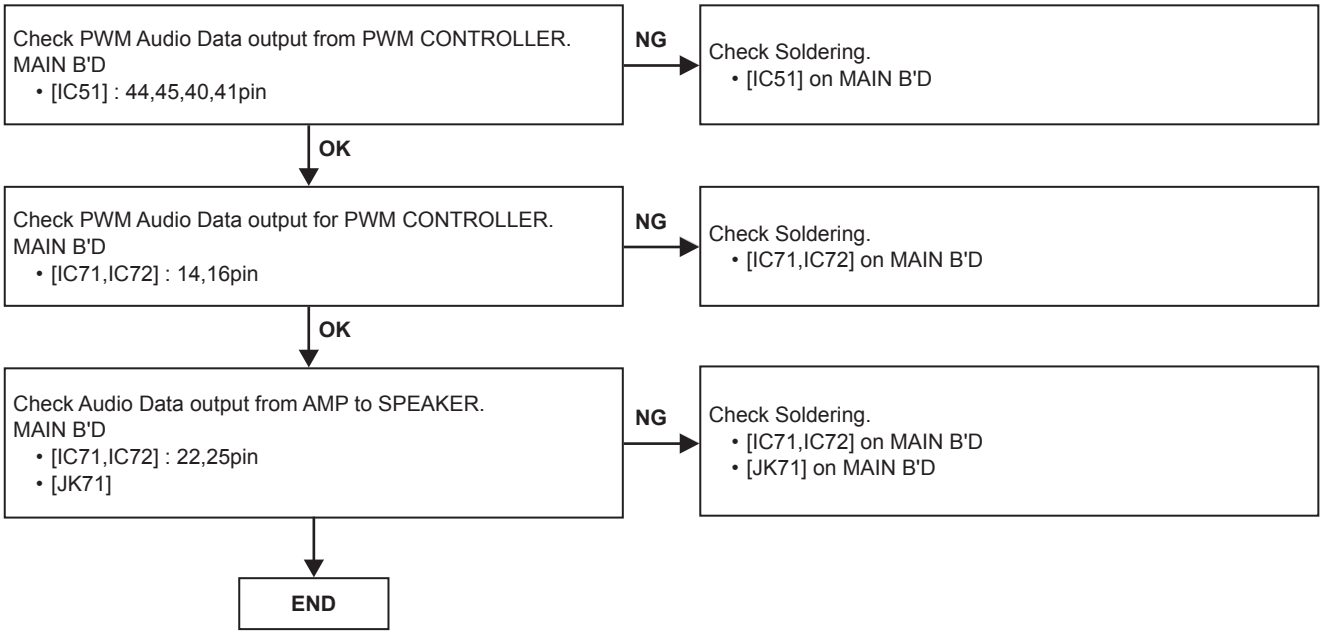

2.3 . AM/FM TUNER-in

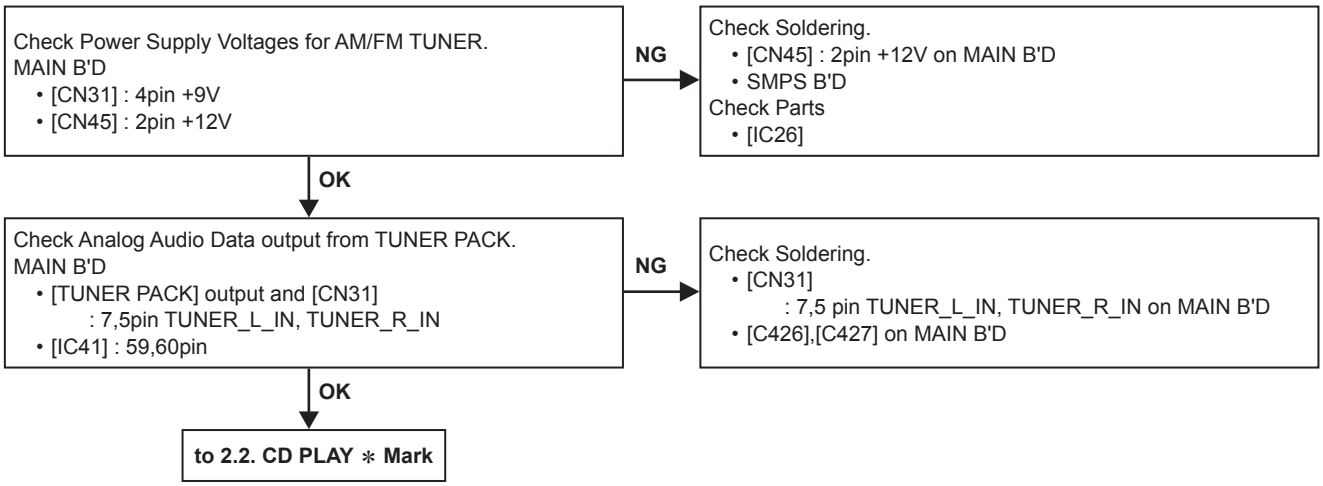

2.4. Portable In

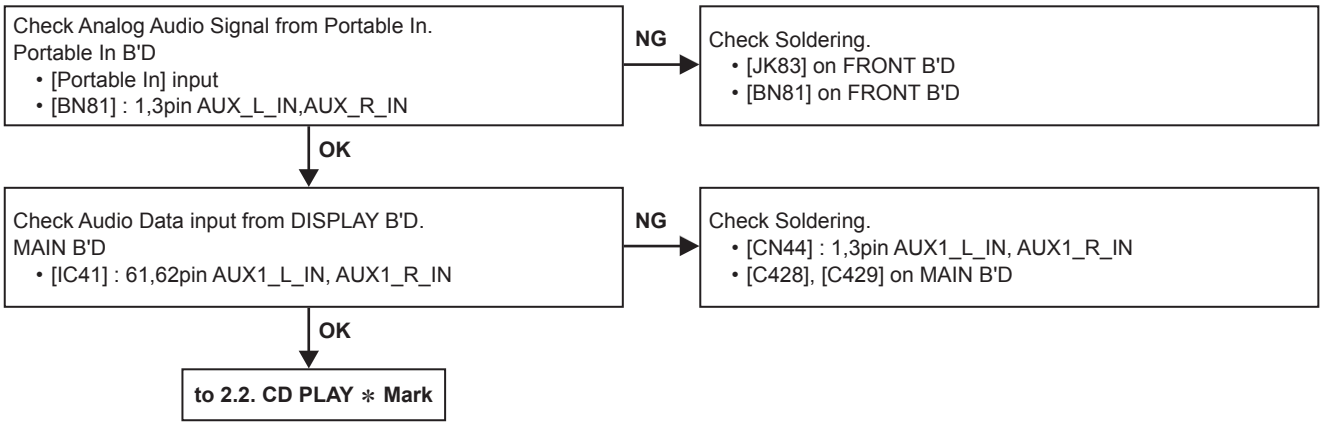

2.5 . AUX1/AUX2

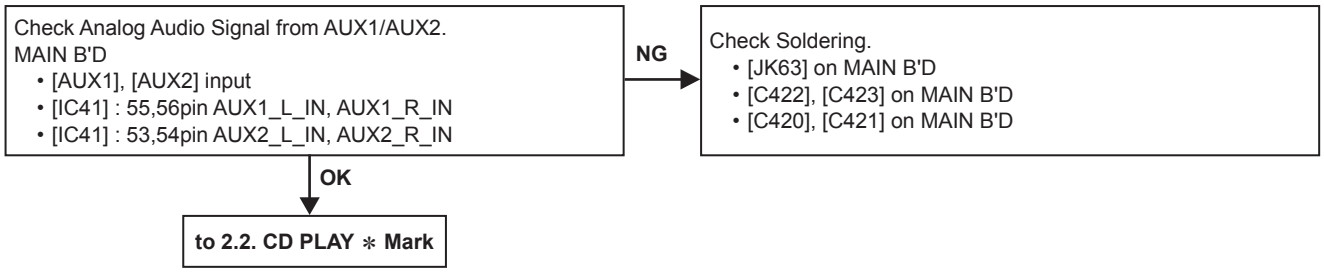

2.6. AUX3 (OPTICAL-in)

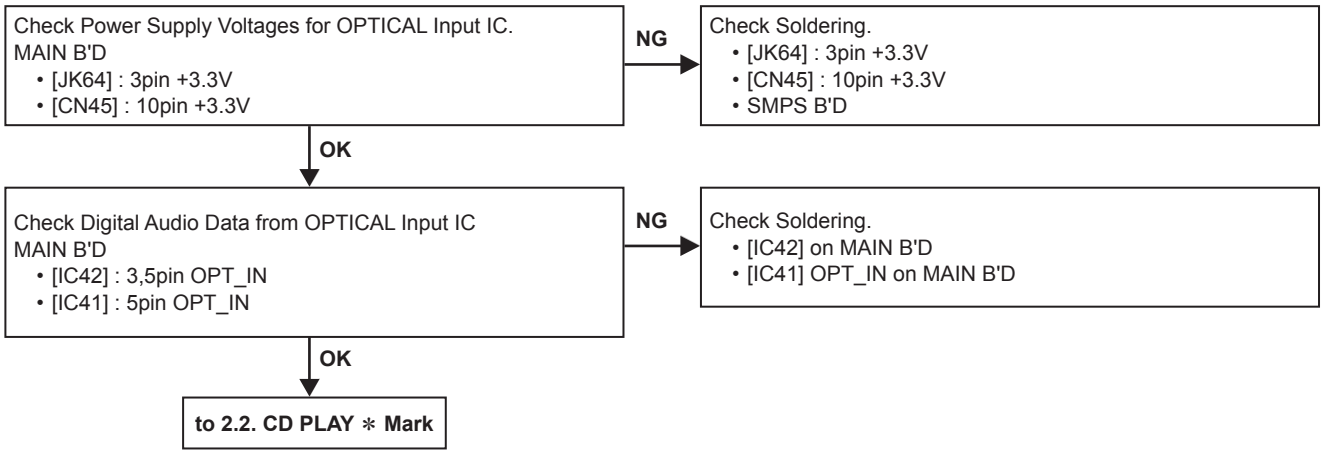

2.7 . USB/iPod Dock/ETHERNET/WiFi

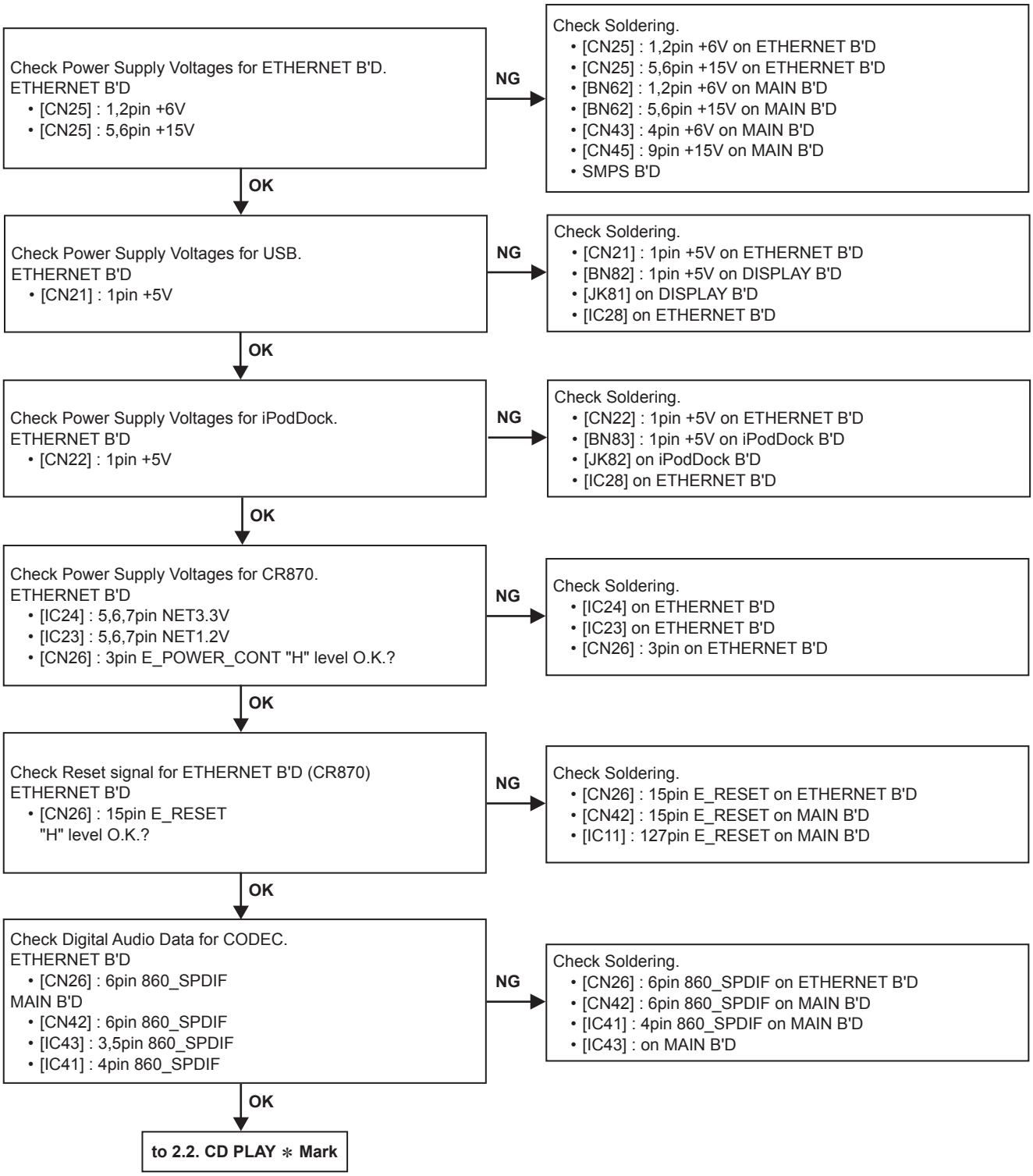

MEASURING METHOD AND WAVEFORMS

To check the waveforms, the GND (-) probe of the oscilloscope to specified reference voltage.
(Except for Inner SW, TRVSW)

NOTES

Measuring Disc: CD/TCD-784
CD-R/TCD-R082W
CD-RW/TCD-W082W

(It is better to use wires for extending between the probe and test points.)
• When watching the HF waveform, use the extending wire as short as possible.
• When HF waveform is noisy or cannot discriminate the eye-pattern, replace the Traverse Unit after measuring the Iop.
• Point ① ～ ⑮ is measured with the point shown below.

1. MAIN PCB : TEST POINT

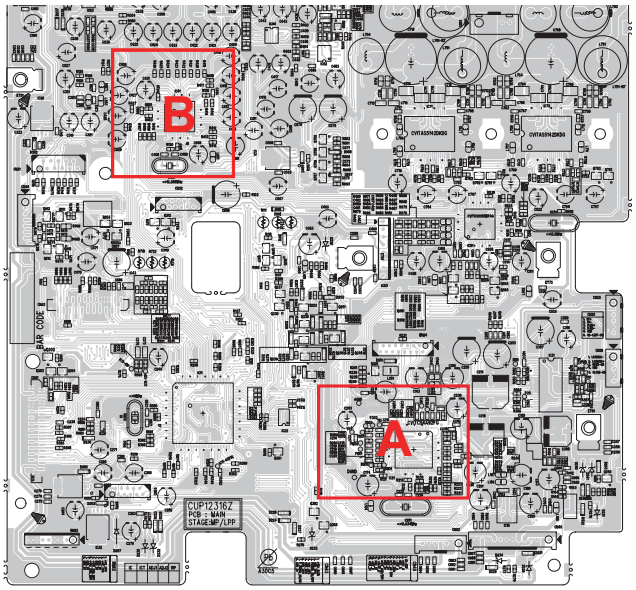

Component side

Detail A

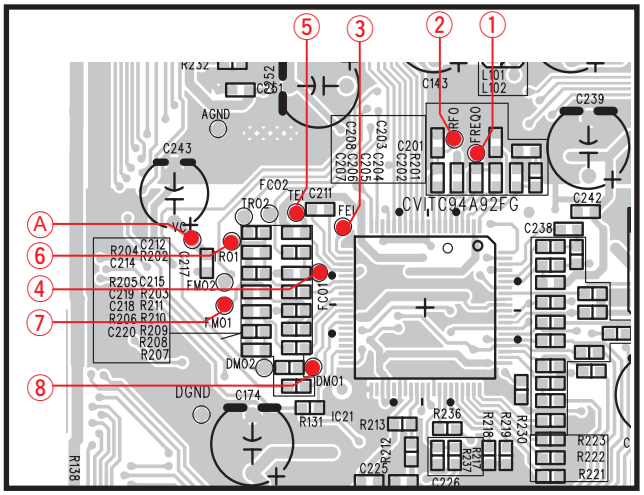

Detail B

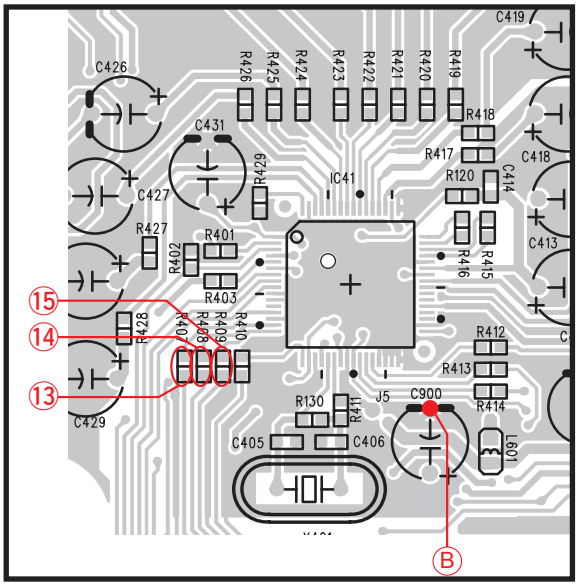

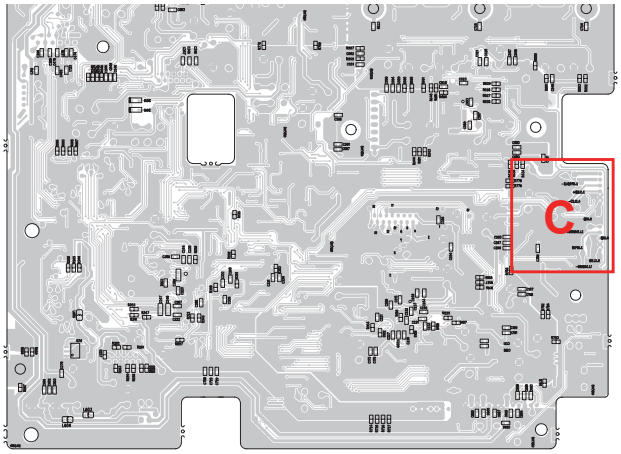

Foil side

Detail C

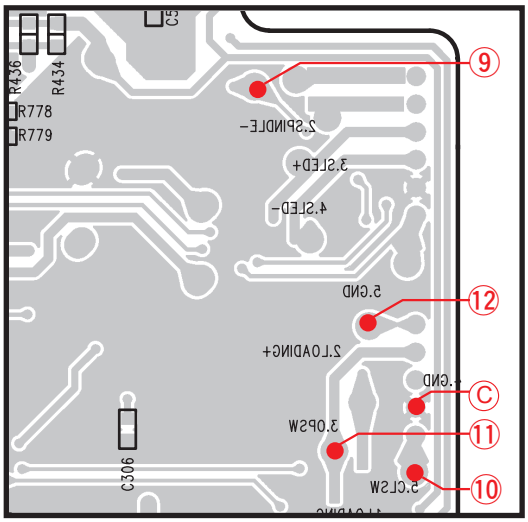

No.	Symbol	
①	TP	RFEQO
②	TP	RFO
③	TP	FEI
④	TP	FOC1
⑤	TP	TEI
⑥	TP	TRO1
⑦	TP	FMO1
⑧	TP	DMO1
⑨	CN26(3)	OPSW
⑩	CN26(5)	CLSW
⑪	CN26(2)	LOAD+
⑫	CN26(1)	LOAD-
⑬	R407	LRCK
⑭	R408	SCLK
⑮	R409	SDATA

No.	Symbol	Reference voltage
Ⓐ	TP	VC : ① ~ ⑧
Ⓑ	C900 -	DGND : ⑬ ~ ⑮
Ⓒ	CN26(4)	GND_DRV : ⑨ ~ ⑫

2. WAVEFORMS

1. DISC PLAY RF WAVEFORM (EYE-PATTERN)

CD(TCD784) PLAY

①RFEQO

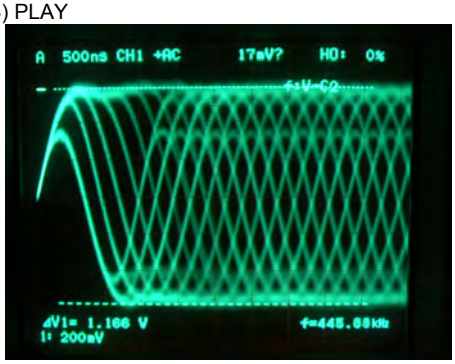

2. DISC DETECTION

CD(TCD784) DETECTION

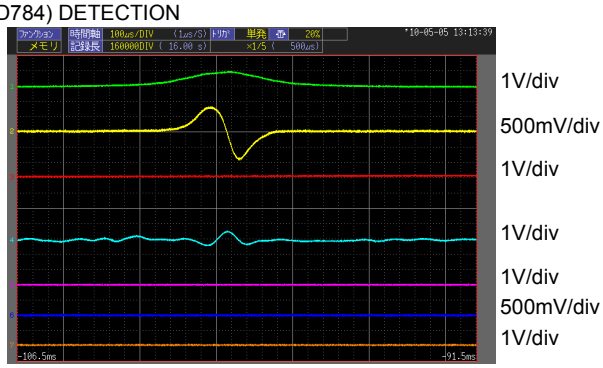

3. TOC READ

CD(TCD784) READ

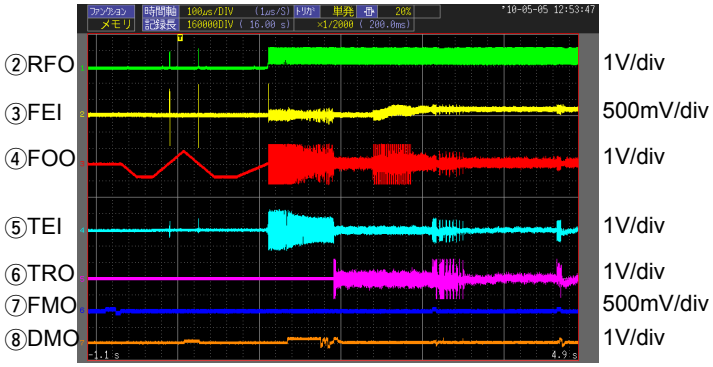

4. FOCUS ADJUSTMENT

CD(TCD784) FOCUS ADJUSTMENT

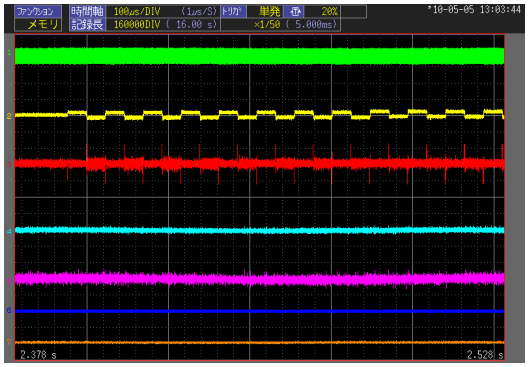

5. CD Playback

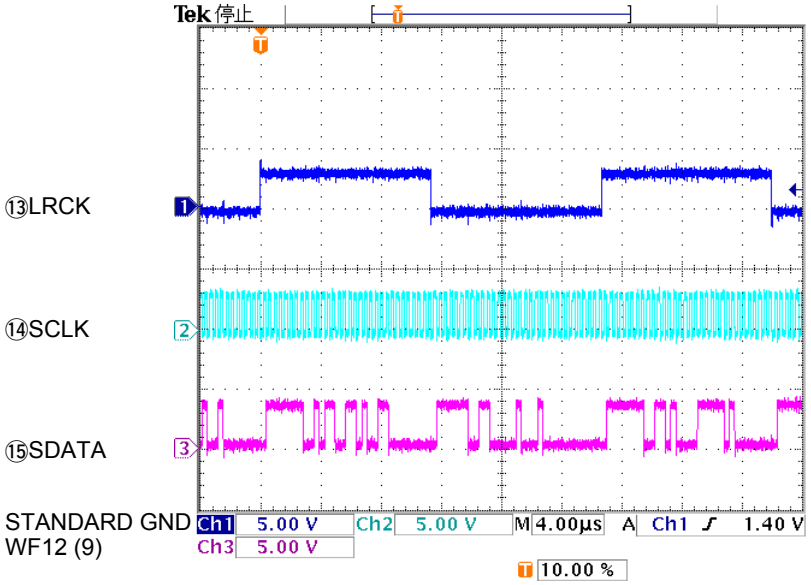

6. LOADER OPEN-CLOSE

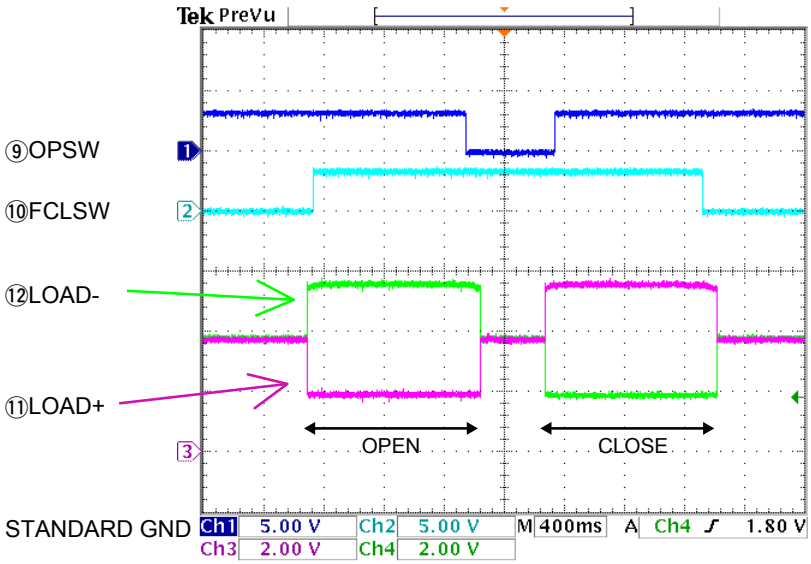

BLOCK DIAGRAM

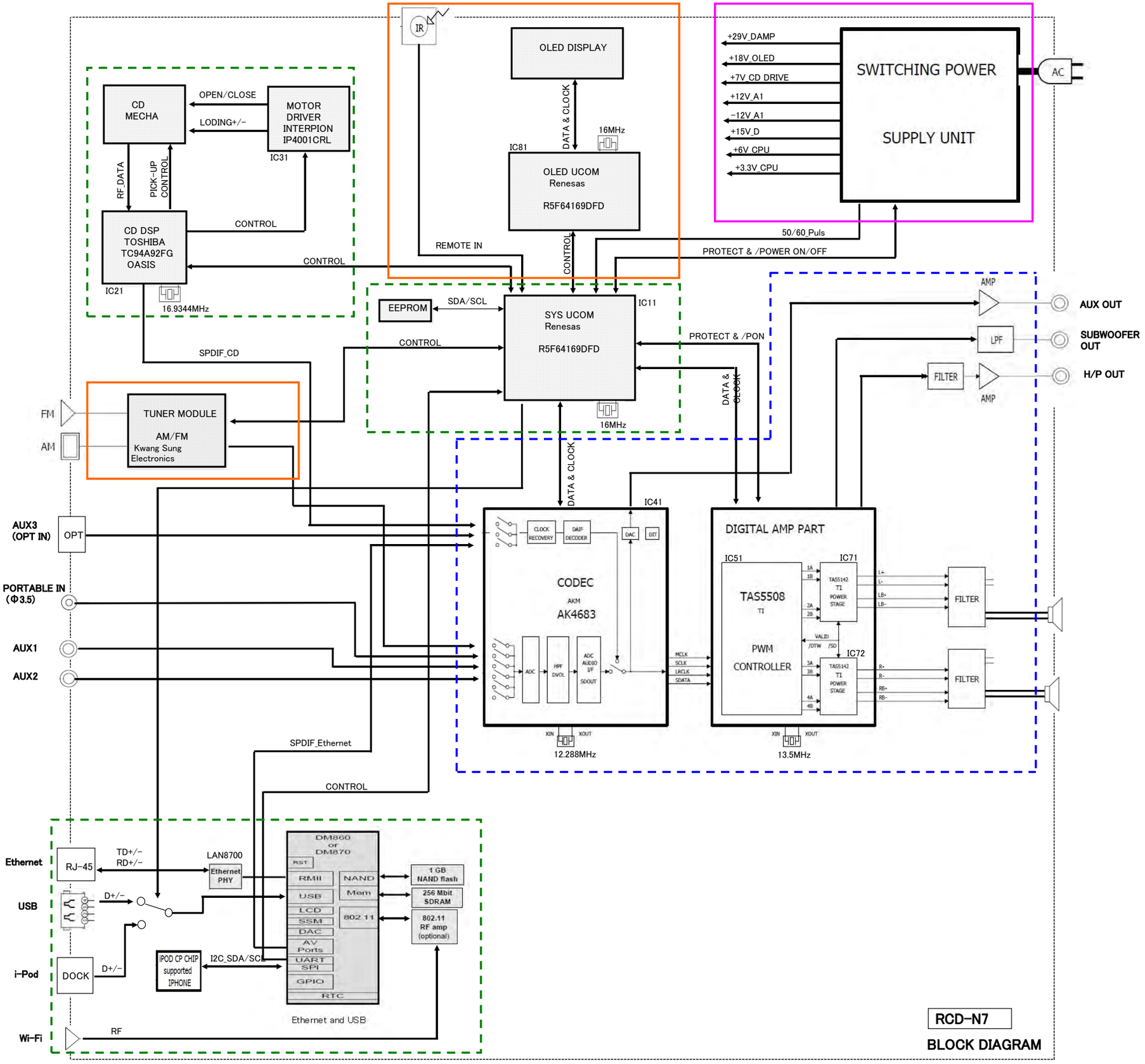

POWER DIAGRAM

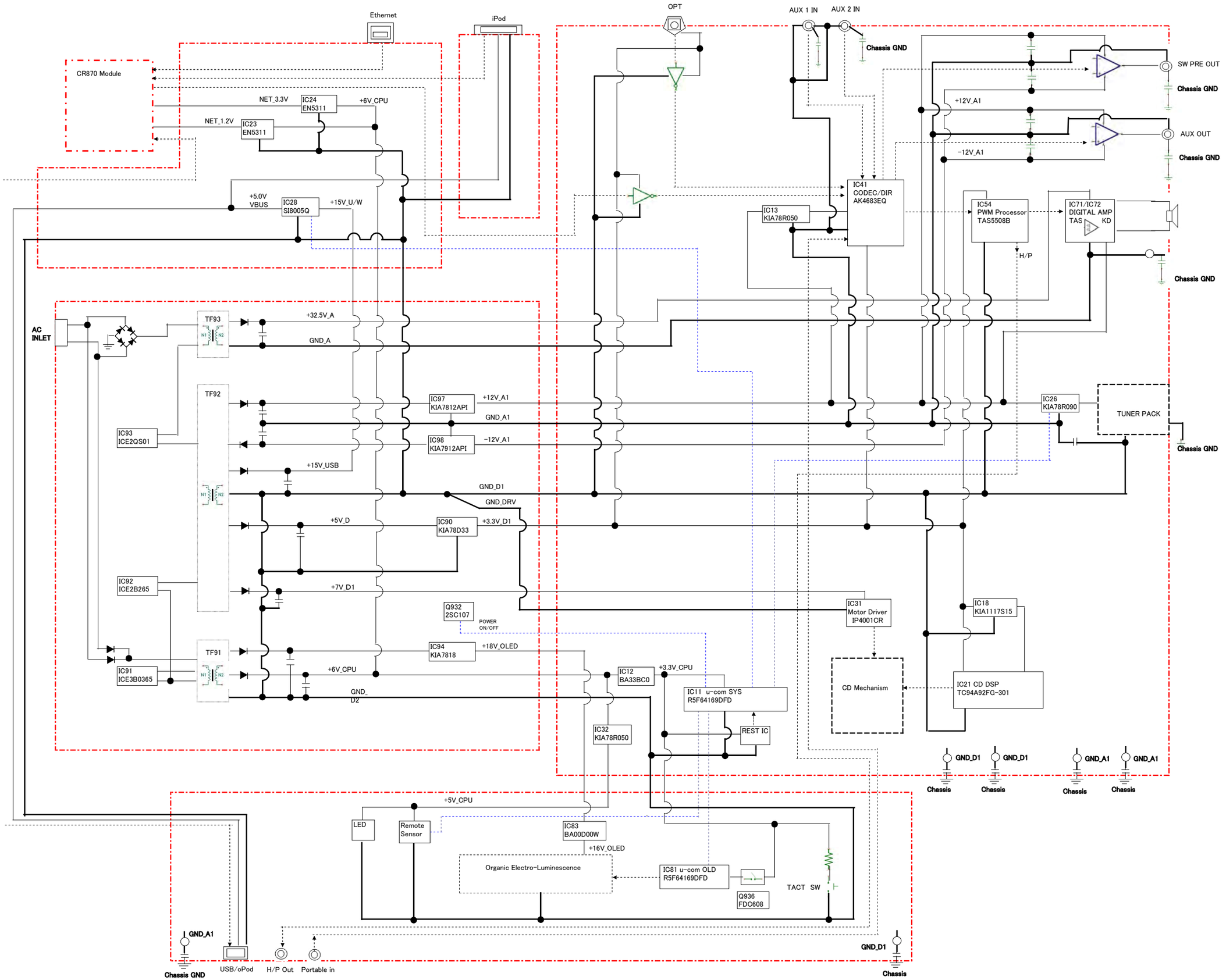

LEVEL DIAGRAM

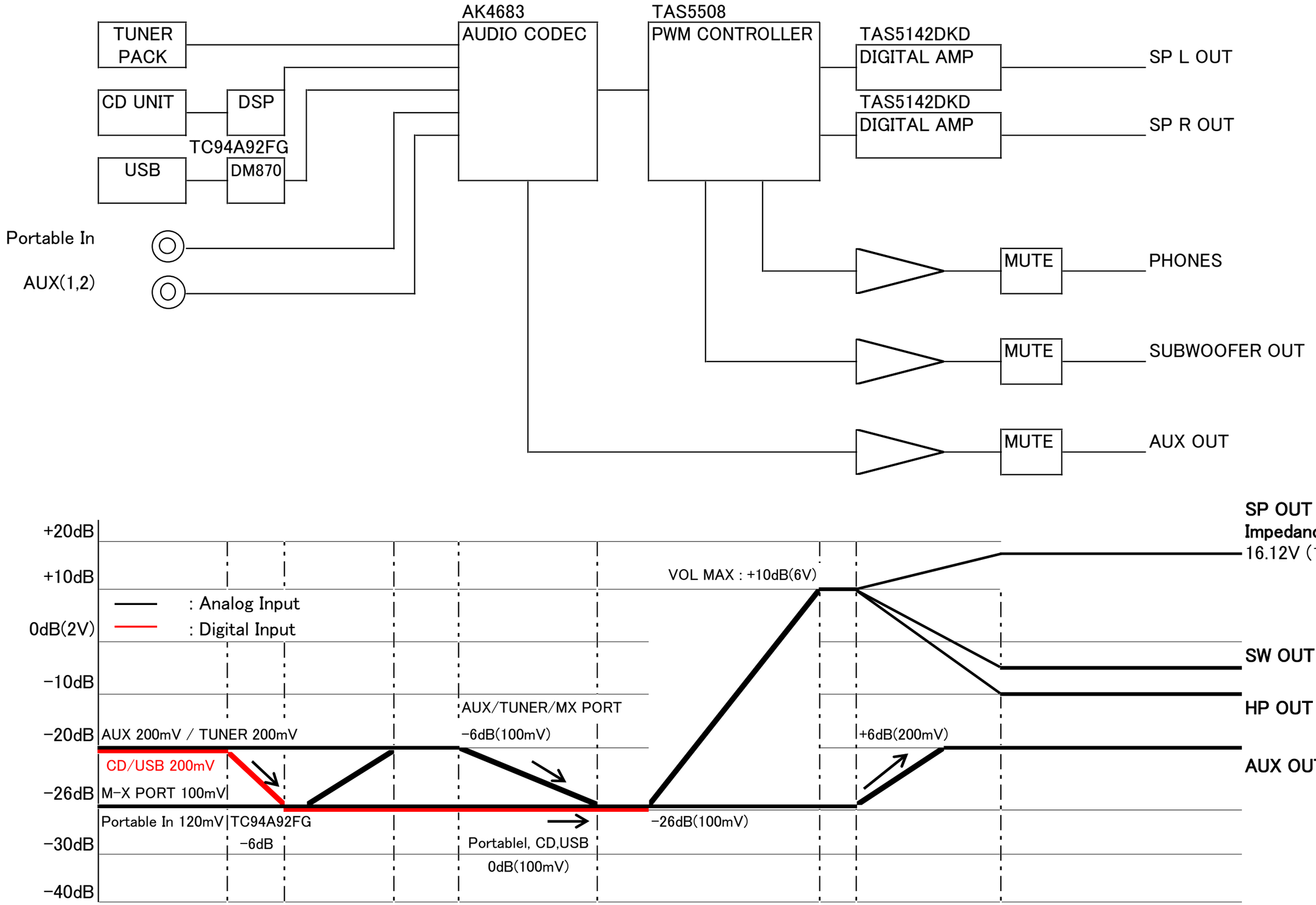

WIRING DIAGRAM

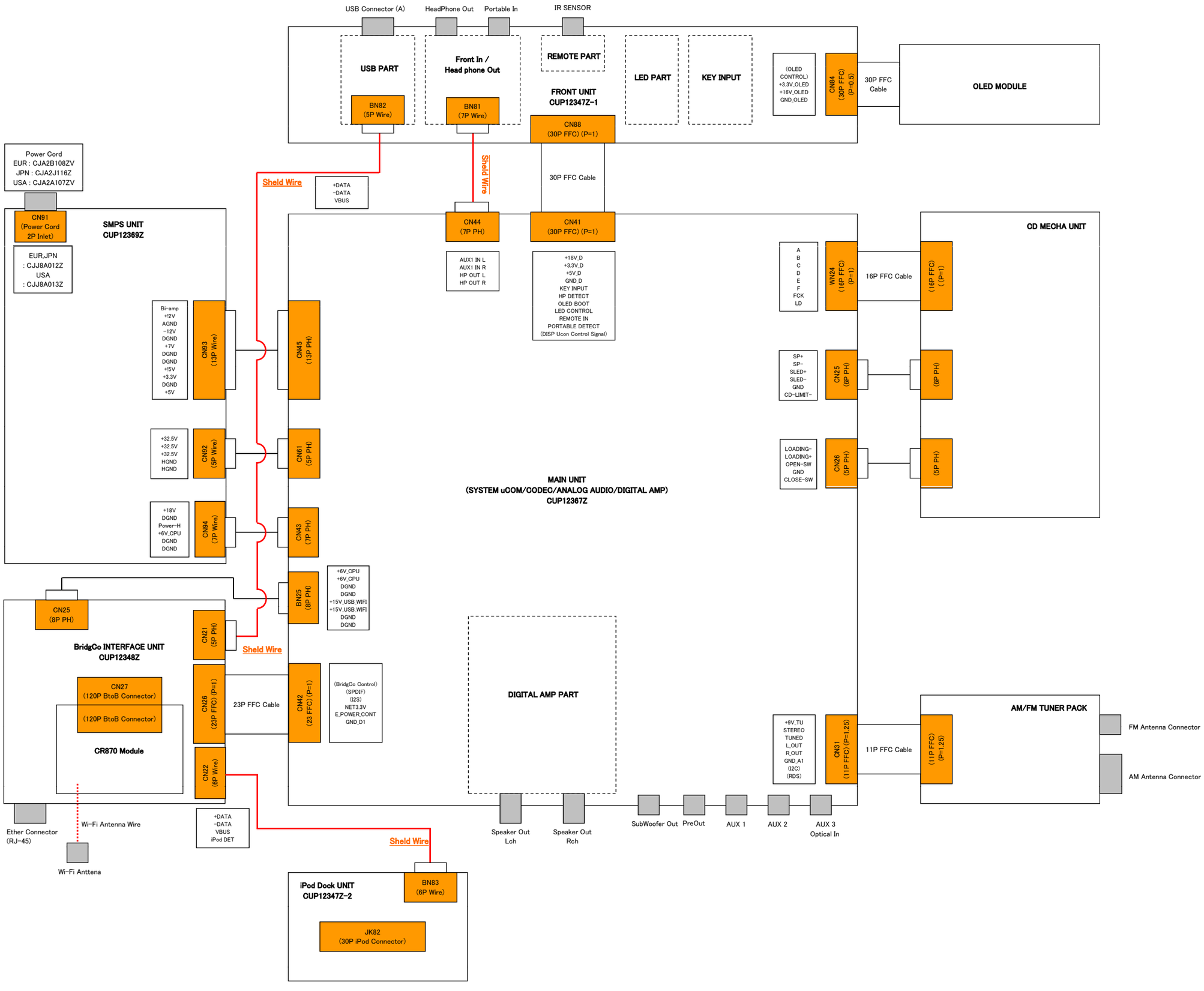

PRINTED WIRING BOARDS

MAIN PCB (COMPONENT SIDE)

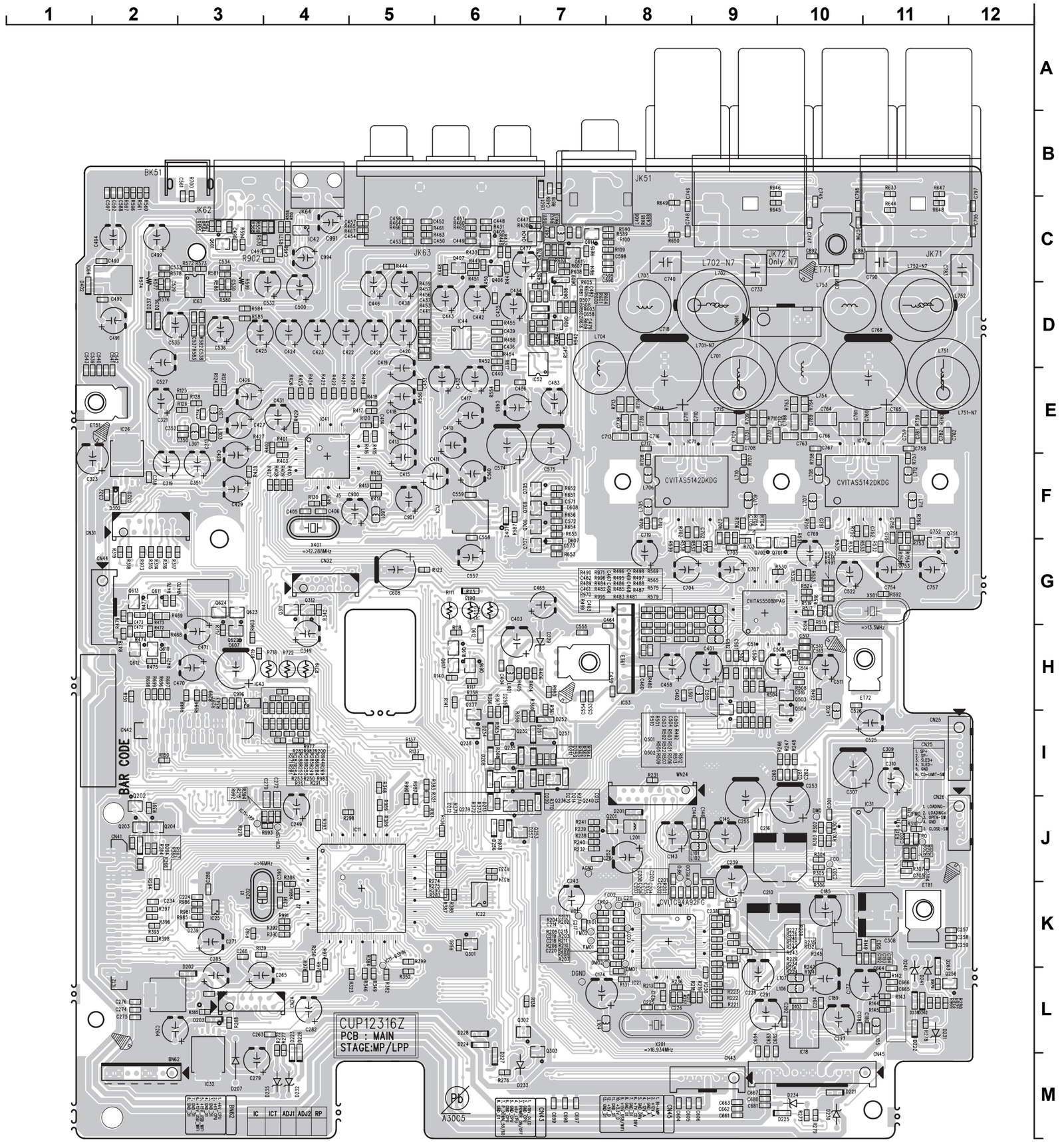

鉛フリー半田

半田付けには、鉛フリー半田 (Sn-Ag-Cu) を使用してください。

Lead-free Solder

When soldering, use the Lead-free Solder (Sn-Ag-Cu).

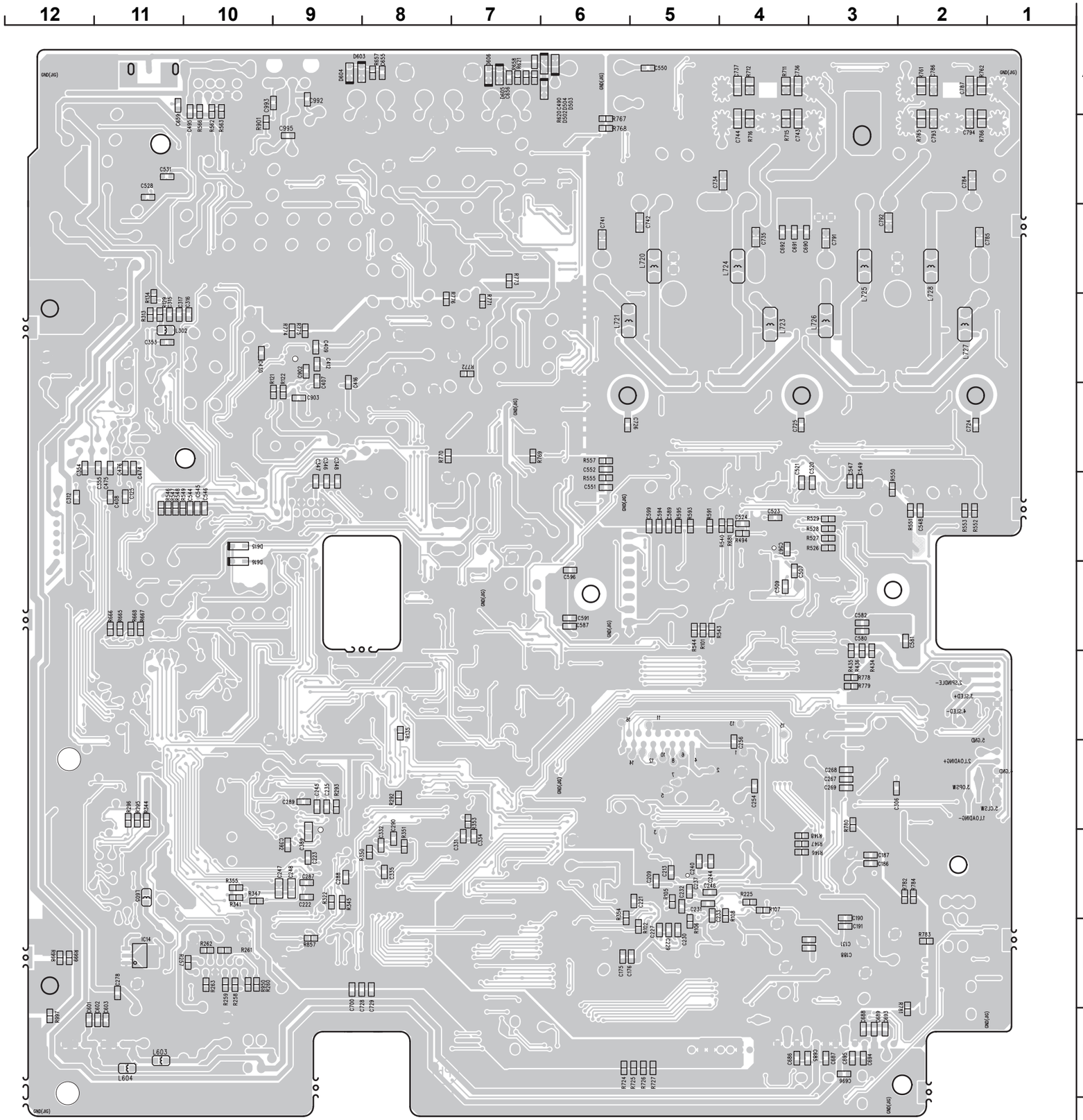

MAIN PCB (FOIL SIDE)

鉛フリー半田
半田付けには、鉛フリー半田 (Sn-Ag-Cu) を使用してください。

Lead-free Solder
When soldering, use the Lead-free Solder (Sn-Ag-Cu).

DISPLAY PCB (COMPONENT SIDE)

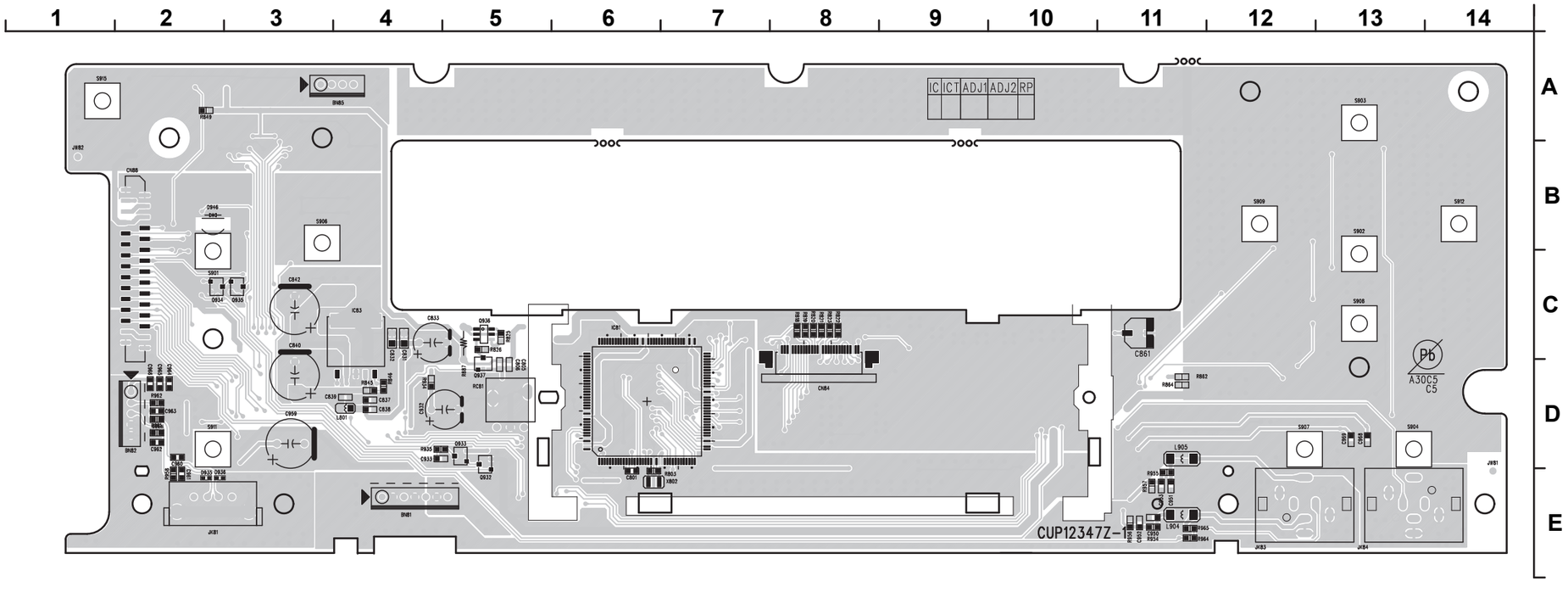

DISPLAY PCB (FOIL SIDE)

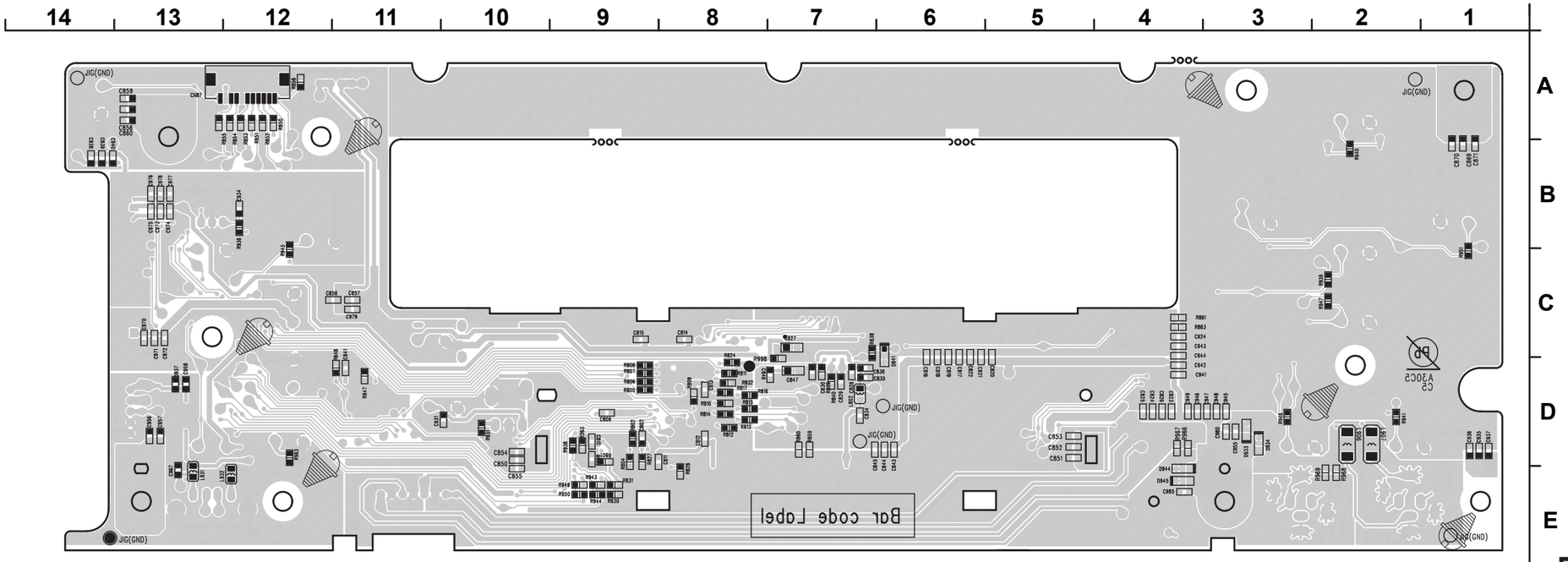

鉛フリー半田
半田付けには、鉛フリー半田 (Sn-Ag-Cu) を使用してください。

Lead-free Solder
When soldering, use the Lead-free Solder (Sn-Ag-Cu).

iPod DOCK PCB (COMPONENT SIDE)

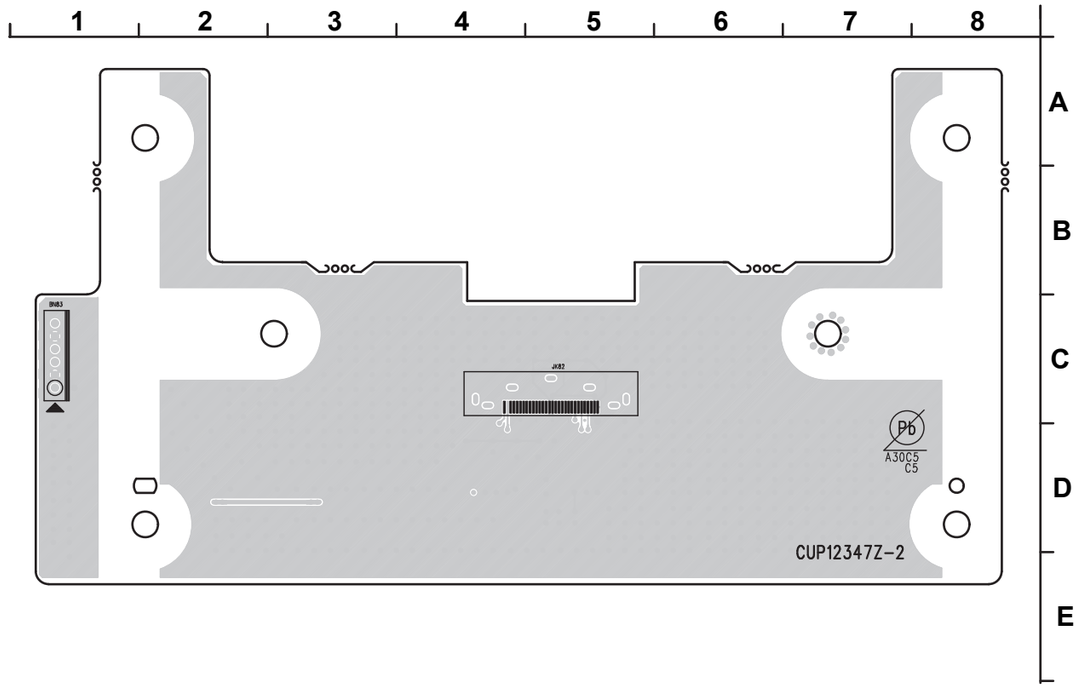

iPod DOCK PCB (FOIL SIDE)

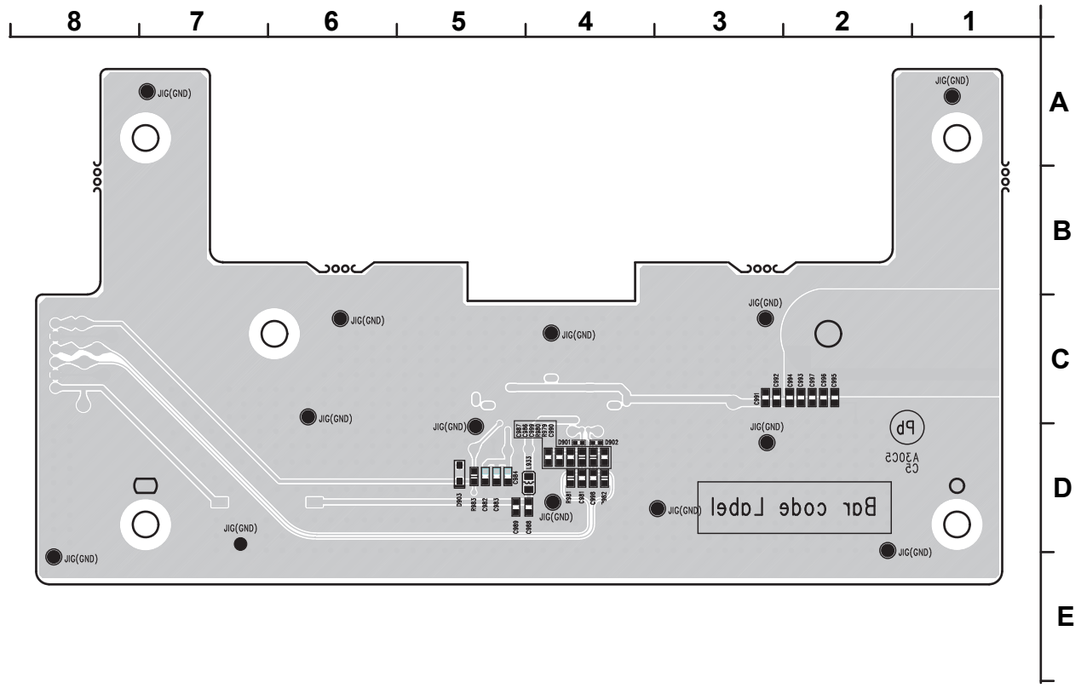

ETHERNET PCB (COMPONENT SIDE)

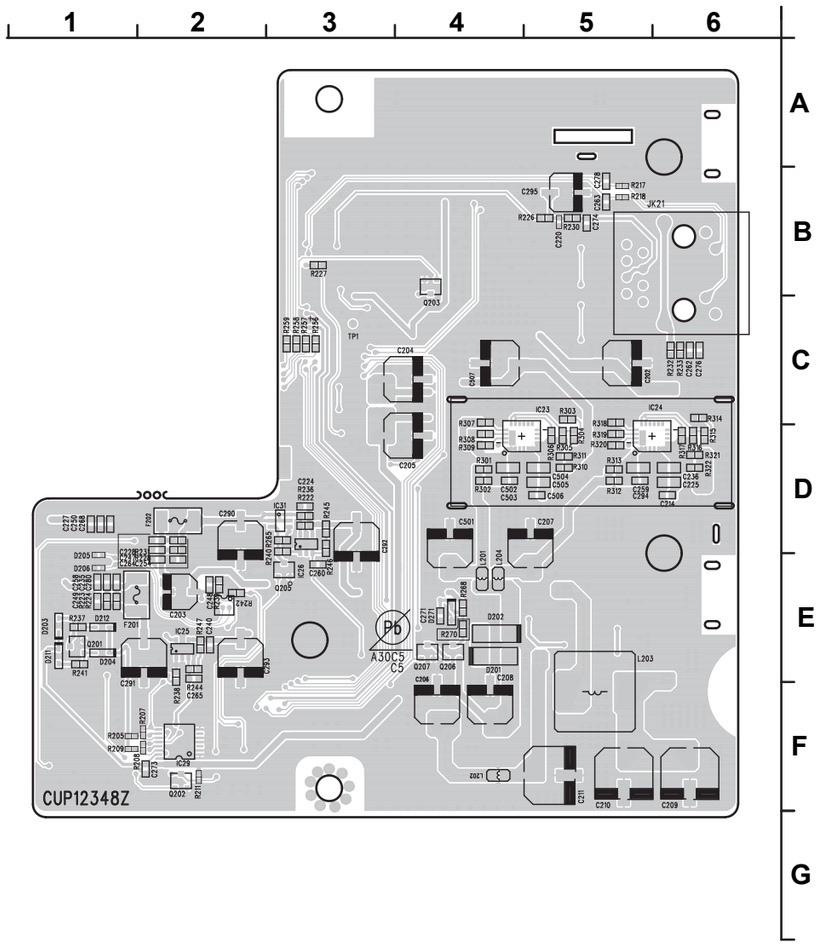

ETHERNET PCB (FOIL SIDE)

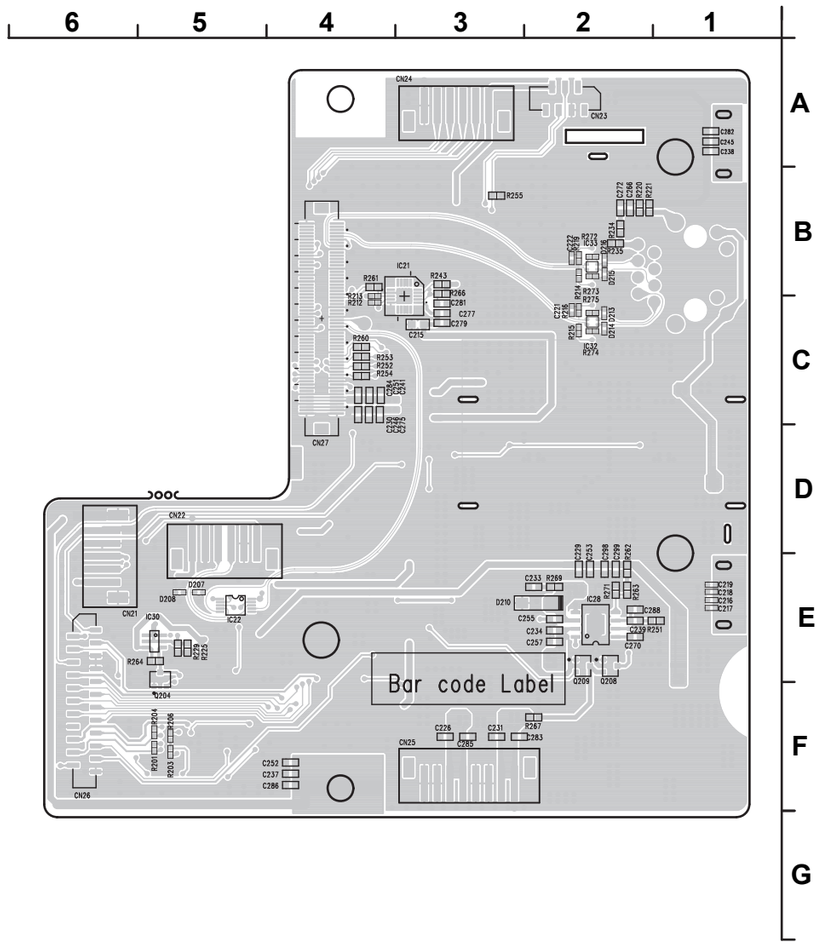

鉛フリー半田
半田付けには、鉛フリー半田 (Sn-Ag-Cu) を使用してください。

Lead-free Solder
When soldering, use the Lead-free Solder (Sn-Ag-Cu).

SMPS PCB (COMPONENT SIDE)

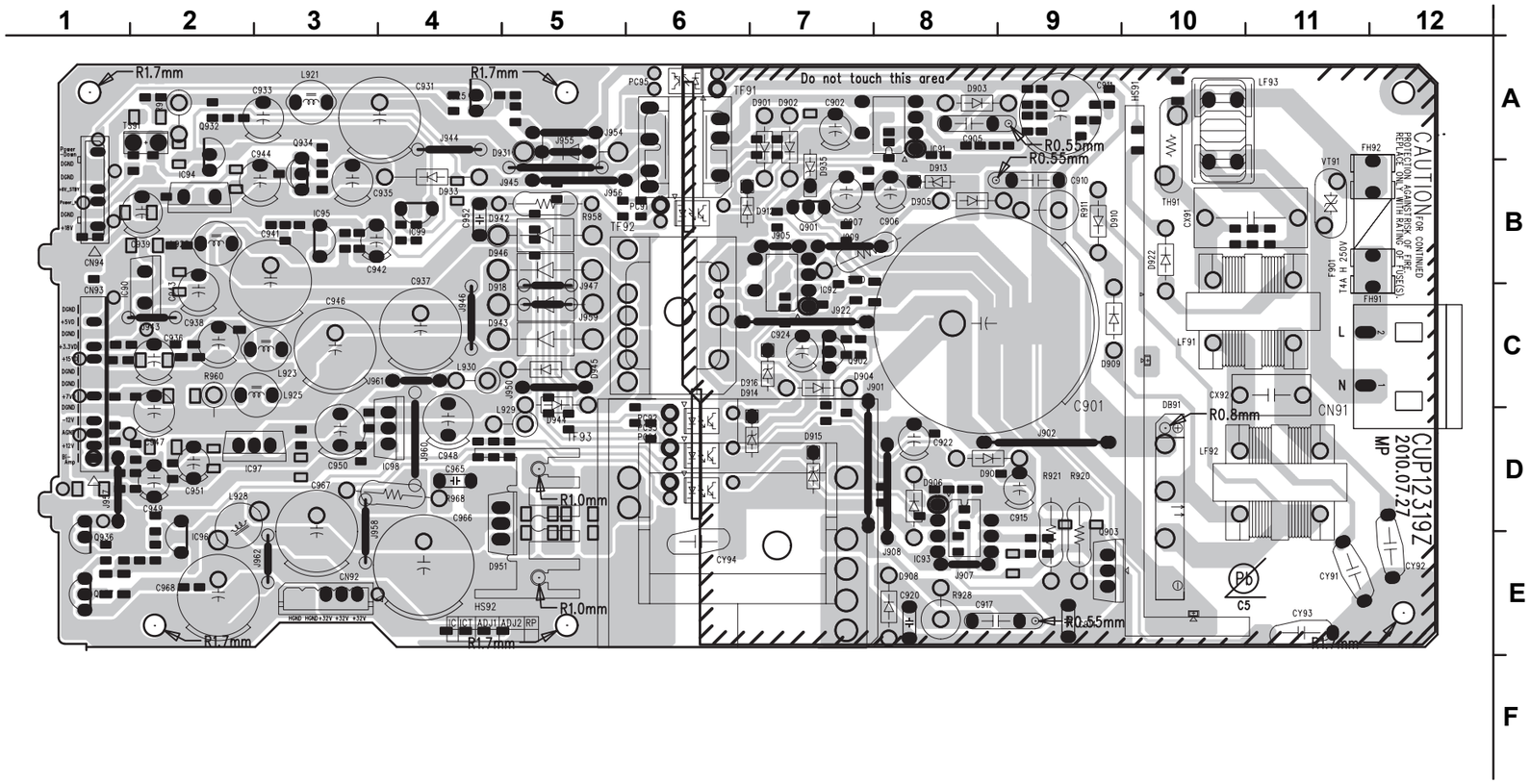

鉛フリー半田
半田付けには、鉛フリー半田 (Sn-Ag-Cu) を使用してください。

Lead-free Solder
When soldering, use the Lead-free Solder (Sn-Ag-Cu).

TUNER BLOCK

SHEET 001

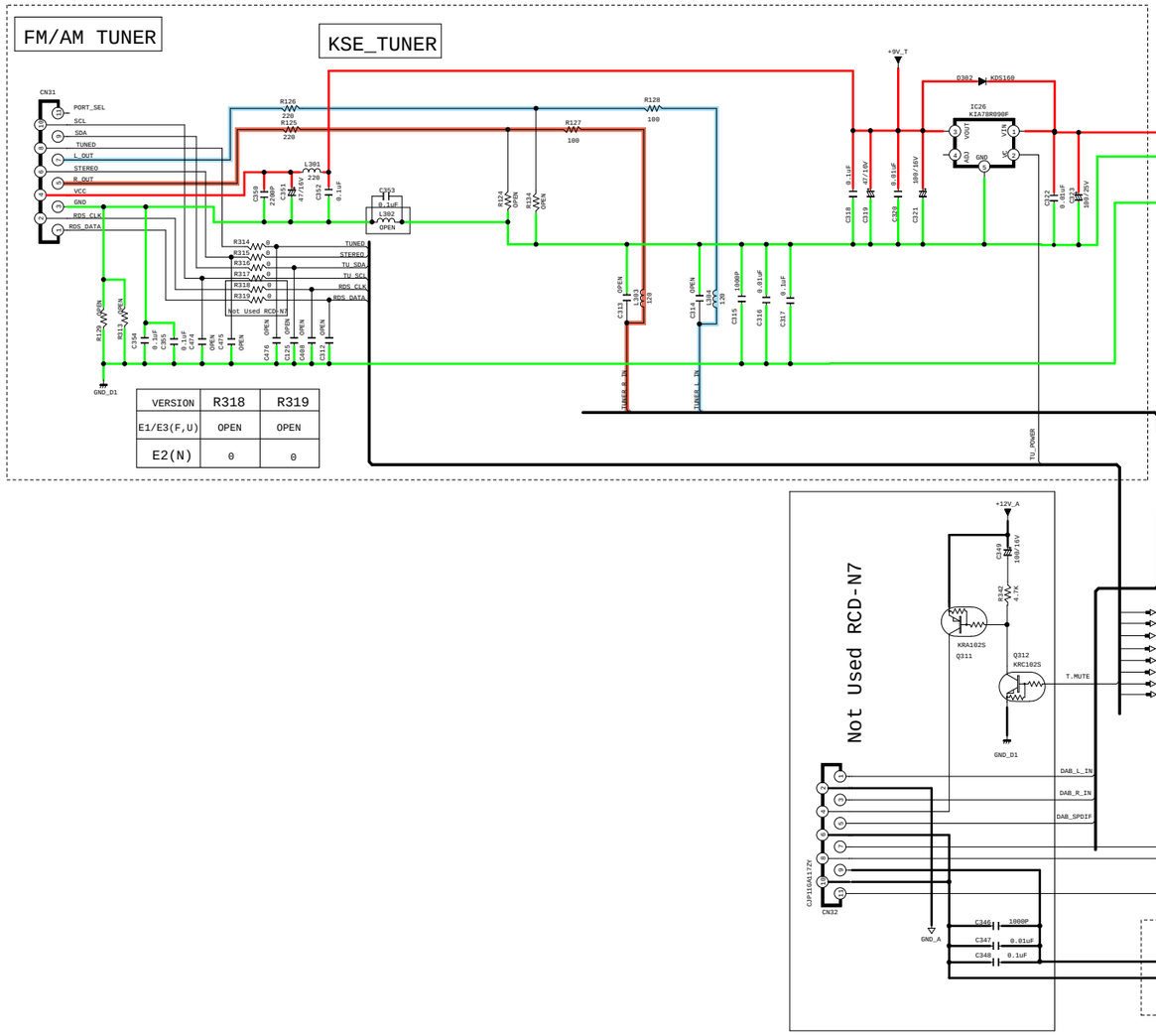

VERSION	R318	R319
E1/E3(F,U)	OPEN	OPEN
E2(N)	0	0

GND
POWER +
POWER -

ANALOG L SIGNAL LINE
ANALOG R SIGNAL LINE
DIGITAL SIGNAL LINE
SW SIGNAL LINE

SCHEMATIC DIAGRAMS (1/8)

CODEC BLOCK
SHEET 002

M-X PORT

HEADPHONE PARTS

SW OUT PARTS

OPT IN

AUX OUT

CODEC PARTS

* RCD-N7 Not Used

* DC_PROTECT

* WIRE ASS'Y(7P)

Not Used RCD-N7

TO MAIN CPU BLOCK Sheet 003

TO CODEC BLOCK Sheet 003

TO DISPLAY BLOCK Sheet004

Sheet 002 FROM CODEC BLOCK

TO MAIN CPU BLOCK Sheet 003

TO TCD DSP BLOCK Sheet 004

TO TUNER BLOCK Sheet 001

SW OUT

ANALOG L SIGNAL LINE
ANALOG R SIGNAL LINE
DIGITAL SIGNAL LINE
SW SIGNAL LINE

GND
POWER +
POWER -

SCHEMATIC DIAGRAMS (2/8)

MAIN CPU BLOCK
SHEET 003

OPTION / MODEL	(A) R944	(B) R286	(C) R200	(D) R285	(E) R982	(F) R283	(G) R997	(H) R280	(I) R282	(J) R287
M-CR603	1K	OPEN	150	OPEN	180	OPEN	270	OPEN	1K	0
RCD-N7	1K	OPEN	OPEN	OPEN	OPEN	OPEN	OPEN	OPEN	OPEN	OPEN

OPTION / MODEL	(1) R269	(2) R284	(3) R983	(4) R249	(5) R256	(6) R255	(7) R251	(8) R252	(9) R253	R254
E3	OPEN	1K	OPEN	OPEN	OPEN	OPEN	OPEN	OPEN	OPEN	OPEN
E2	1K	OPEN	150	OPEN	180	OPEN	270	0	OPEN	OPEN
E1C	1K	OPEN	150	OPEN	180	OPEN	270	OPEN	1K	0
JP	1K	OPEN	OPEN	OPEN	OPEN	OPEN	OPEN	OPEN	OPEN	OPEN

GND — POWER + — POWER -

SCHEMATIC DIAGRAMS (3/8)

CD DSP BLOCK
SHEET 004

TO MAIN CPU BLOCK SHEET 003

TO CD PICKUP

TO MECHANISM

TO MECHANISM

MOTOR DRIVE

CD DSP
IC21
TC94A92FG

IC31
IP4001CRLTF

IC18
KIA1117S15

D103 KDS160

ANALOG L SIGNAL LINE
ANALOG R SIGNAL LINE
DIGITAL SIGNAL LINE
SW SIGNAL LINE

GND
POWER +
POWER -

SCHEMATIC DIAGRAMS (4/8)

PWM/AMP BLOCK
SHEET 005

PWM CONTROLLER PARTS

AMP PARTS

TO CODEC BLOCK SHEET 002

TO MAIN CPU BLOCK SHEET 002

TO MAIN CPU BLOCK SHEET 003

TO CODEC BLOCK SHEET 002

RCD-N7 Not Used

SPEAKER OUT

*LEFT CHASSIS

ANALOG L SIGNAL LINE
ANALOG R SIGNAL LINE
DIGITAL SIGNAL LINE
SW SIGNAL LINE

GND
POWER +
POWER -

SCHEMATIC DIAGRAMS (5/8)

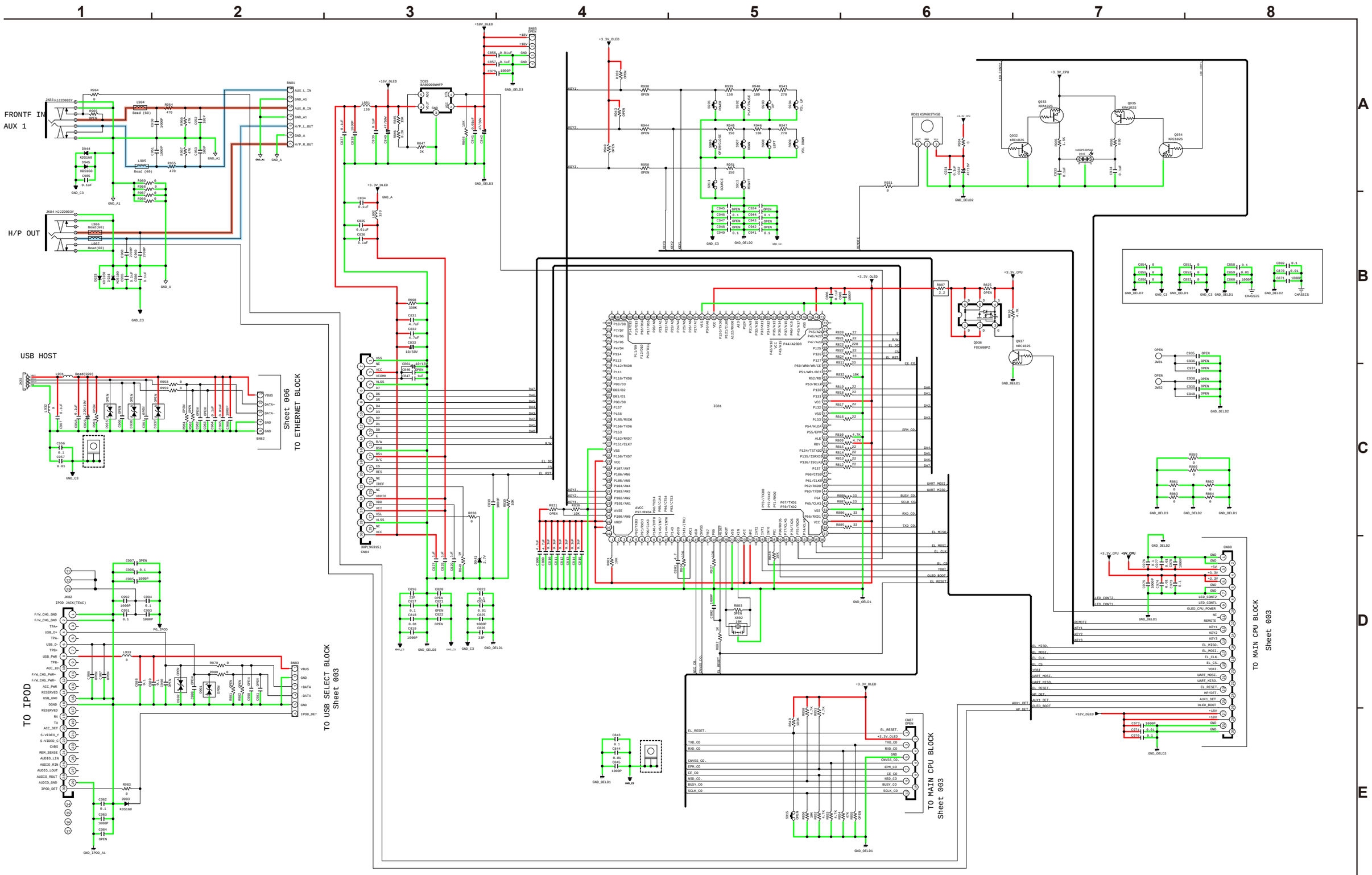

ANALOG L SIGNAL LINE
ANALOG R SIGNAL LINE
DIGITAL SIGNAL LINE
SW SIGNAL LINE

GND POWER + POWER -

SCHEMATIC DIAGRAMS (6/8)

RCD-N7 SMPS SCHEMATIC DIAGRAM

	N7
C901	Samyoung

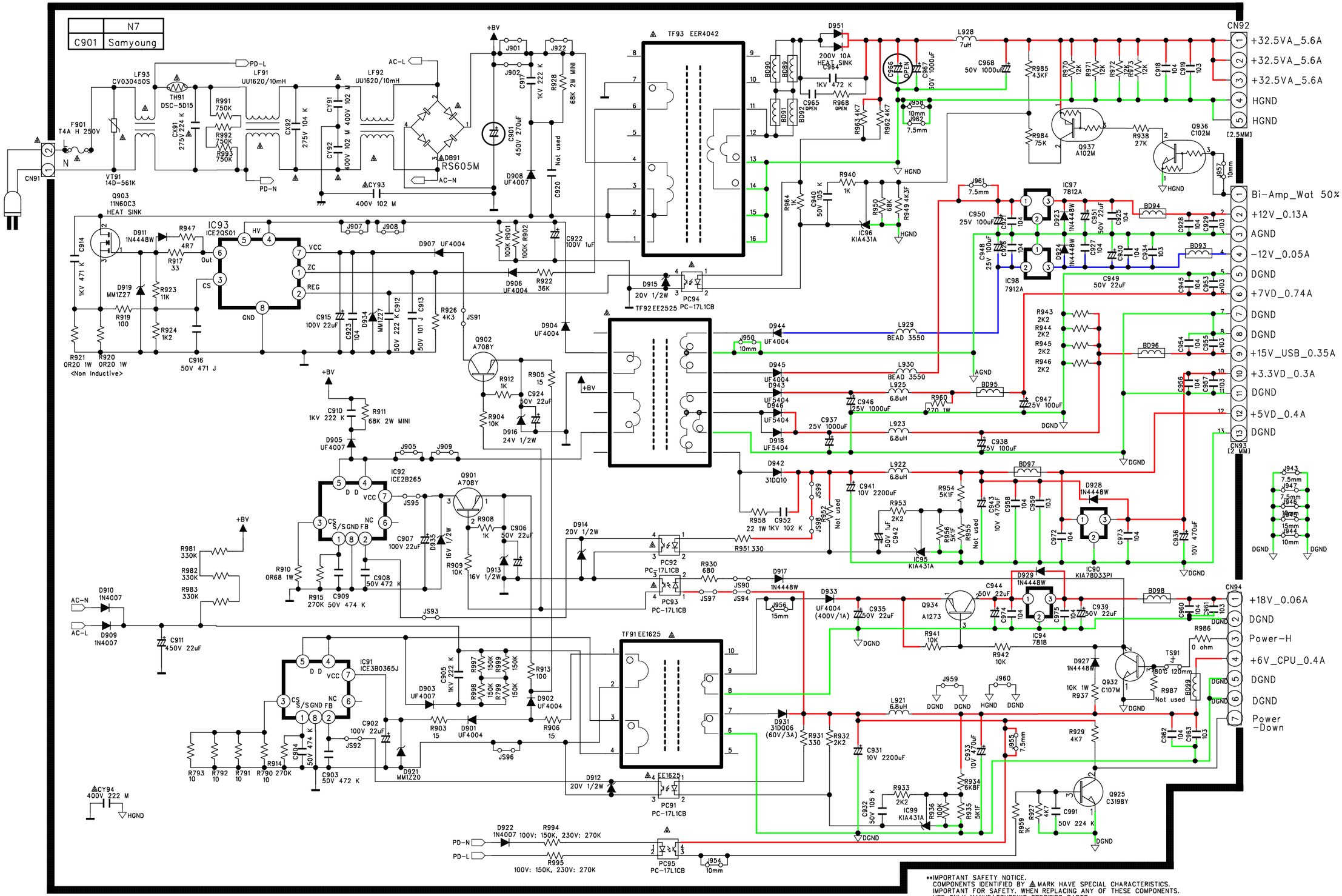

**IMPORTANT SAFETY NOTICE.
COMPONENTS IDENTIFIED BY ⚠ MARK HAVE SPECIAL CHARACTERISTICS.
IMPORTANT FOR SAFETY. WHEN REPLACING ANY OF THESE COMPONENTS.
USE ONLY MANUFACTUREY'S SPECIFIED PARTS.
**THE UNIT OF RESISTANCE IS OHM.
K=1000 OHM, M=1000 KOHM
**THE UNIT OF CAPACITANCE IS MICROFARAD (uF)
pF=10⁻⁶ uF
**THIS SCHEMATIC DIAGRAM MAY MODIFIED AT ANY TIME WITH THE
IMPROVEMENT OF PERFORMANCE

SCHEMATIC DIAGRAMS (7/8)

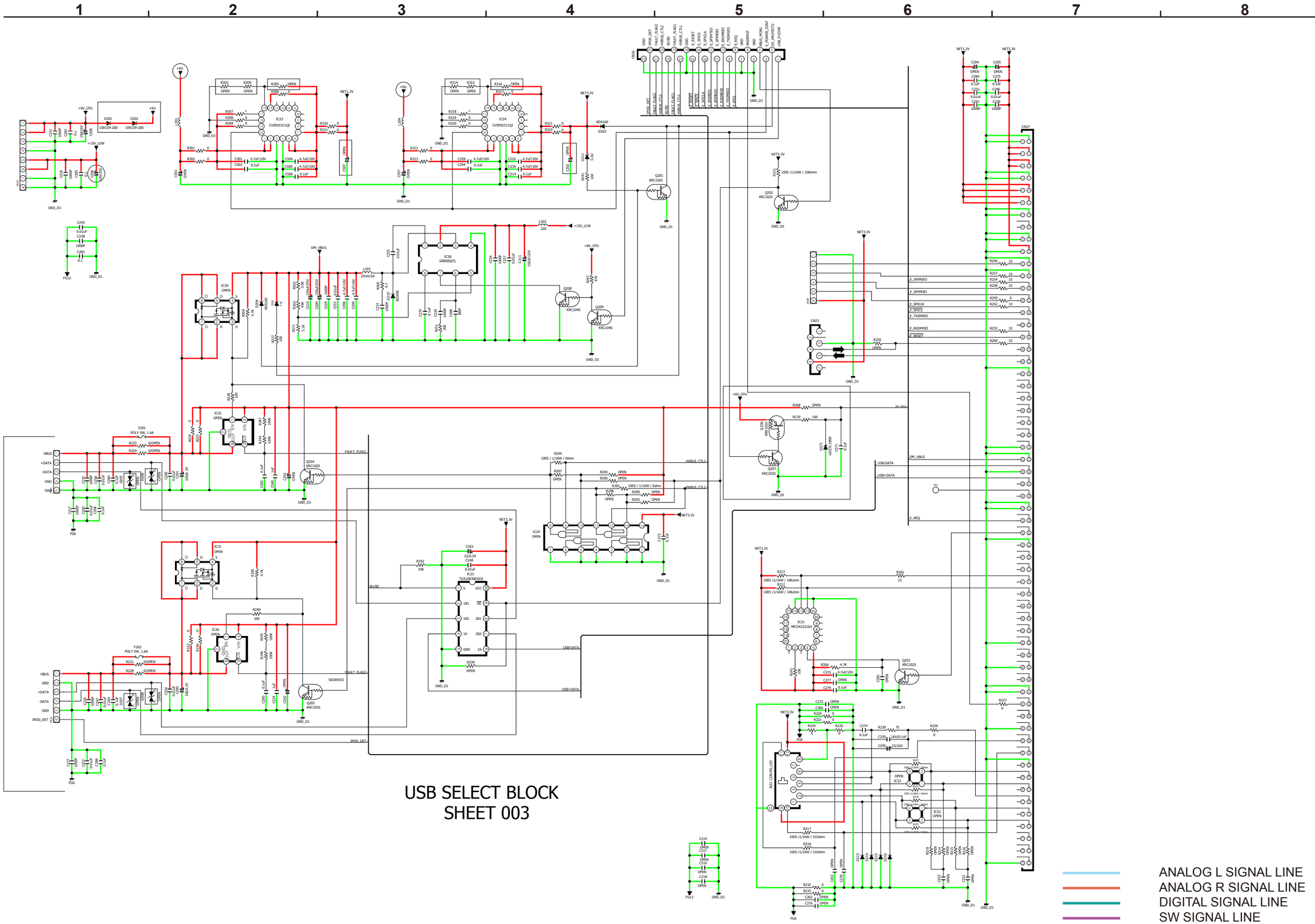
USB SELECT BLOCK
SHEET 003
GND
POWER +
POWER -
ANALOG L SIGNAL LINE
ANALOG R SIGNAL LINE
DIGITAL SIGNAL LINE
SW SIGNAL LINE

EXPLODED VIEW ⚠5

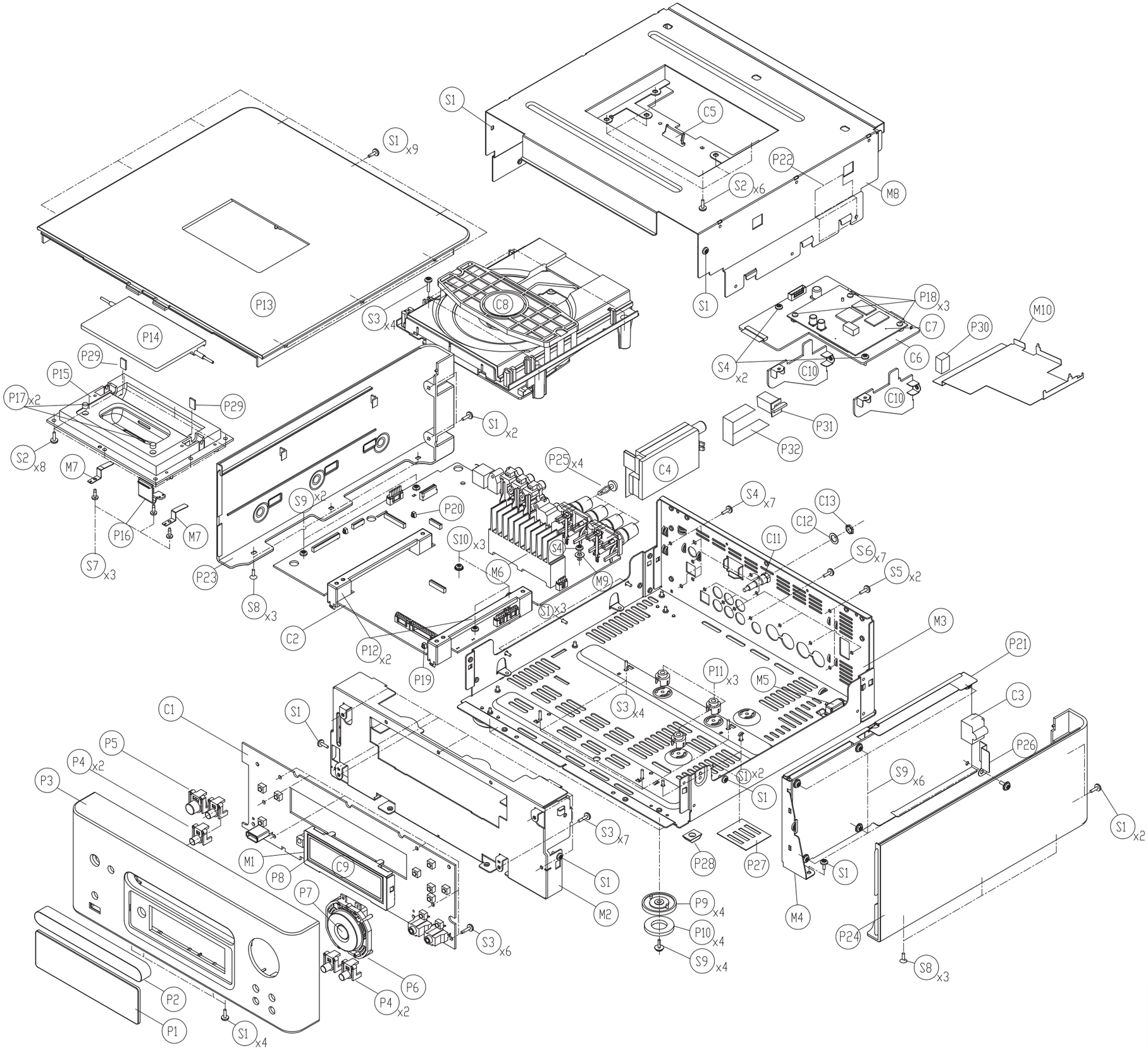

WARNING:
Parts marked with this symbol ⚠ have critical characteristics.
Use ONLY replacement parts recommended by the manufacturer.

PARTS LIST OF EXPLODED VIEW

∗Parts for which "nsp" is indicated on this table cannot be supplied.

∗P.W.B. ASS'Y for which "nsp" is indicated on this table cannot be supplied. When repairing the P.W.B. ASS'Y, check the board parts table and order replacement parts.

∗Part indicated with the mark " ★ " is not illustrated in the exploded view.

∗The parts listed below are for maintenance only, might differ from the parts used in the unit in appearances or dimensions.

Note: The symbols in the column "Remarks" indicate the following destinations.

E3 : U.S.A. & Canada model E2 : Europe model E1C : China model ⚠5

	Ref. No.	Part No.	Part Name	Remarks		Q'ty	New	
	M1	nsp	COVER, SHIED OLED		CMC1A405	1		
	M2	nsp	CHASSIS, FRONT		CUF1A016	1	*	
	M3	nsp	CHASSIS, BOTTOM	E2	CUA5A287Z	1	*	
	M3	nsp	CHASSIS, BOTTOM	E3	CUA5A287Y	1	*	
	M3	nsp	CHASSIS, BOTTOM	E1C	CUA5A287W	1	*	⚠5
	M4	nsp	COVER , SHIELD		CMD1A678	1		
	M5	nsp	COVER , SCREW		CMD1A495	1		
	M6	nsp	HEAT SINK		CMY1A368	1		
	M7	nsp	SPRING, DOOR		CUS1A161	2	*	
	M8	nsp	CHASSIS, TOP		CUF1A017	1	*	
	M9	nsp	WASHER		CNW1A035	1		
	M10	nsp	PLATE, TUNER		CMC1A418	1	*	
	P1	943416011790D	WINDOW, OLED		CGU1A454Z	1	*	
	P2	943418011800D	DOOR, TRAY	White model	CGR1A514W4	1	*	⚠5
	P2	943418100280S	DOOR, TRAY	Black model	CGR1A514B60	1	*	⚠5
	P3	943402011030D	PANEL, FRONT	White model	CGW1A504ZW4	1	*	⚠5
	P3	943402101880D	PANEL, FRONT	Black model	CGW1A504YB60	1	*	⚠5
	P4	943411011810D	BUTTON, CONTROL	White model	CBT1A1146W4	4	*	⚠5
	P4	943411101500D	BUTTON, CONTROL	Black model	CBT1A1146B60	4	*	⚠5
	P5	943411011820D	BUTTON, POWER	White model	CBT1A1145ZW4	1	*	⚠5
	P5	943411101510D	BUTTON, POWER	Black model	CBT1A1145YB60	1	*	⚠5
	P6	943411011830D	BUTTON, CURSOR	White model	CBT1A1147ZW4	1	*	⚠5
	P6	943411101520D	BUTTON, CURSOR	Black model	CBT1A1147YB60	1	*	⚠5
	P7	943411011840D	BUTTON, ENTER A	White model	CBT1A1077YW4	0.5	*	⚠5
			BUTTON, ENTER B	White model	CBT1A1089YW4	0.5	*	
	P7	943411101530D	BUTTON, ENTER A	Black model	CBT1A1077XB60	0.5	*	⚠5
			BUTTON, ENTER B	Black model	CBT1A1089XB60	0.5	*	
	P8	nsp	HOLDER, OLED		CMH1A309	1		
	P9	407010002000M	FOOT		CKL1A102	4		
	P10	943407002950M	RUBBER ,FOOT		CHG1A297	4		
	P11	nsp	HOLDER , PCB		CHE170	3		
	P12	nsp	SUPPORT, MECHA		CMH1A311	2	*	
	P13	943403011850D	COVER, TOP	White model	CKD1A074W4	1	*	⚠5
	P13	943403100490D	COVER, TOP	Black model	CKD1A074B60	1	*	⚠5
	P14	943415011860D	DOOR, IPOD	White model	CGR1A515ZAW4	1	*	⚠5
	P14	943415100300D	DOOR, IPOD	Black model	CGR1A515ZAB60	1	*	⚠5
	P15	943419011870D	ESC, IPOD DOCK	White model	CGR1A516W4	1	*	⚠5
	P15	943419100340D	ESC, IPOD DOCK	Black model	CGR1A516B60	1	*	⚠5
	P16	943453011880D	SPRING, ADAPTOR	White model	CBH1A005	1	*	⚠5
	P16	943453100270D	SPRING, ADAPTOR	Black model	CBH1A005Z	1	*	⚠5
	P17	943471011890D	CUSHION	White model	CHG1A482	2	*	⚠5
	P17	943471100500D	CUSHION	Black model	CHG1A482Z	2	*	⚠5
	P18	nsp	SUPPORT, PCB(LCA3-3)		CRE1A096	3		
	P19	nsp	SUPPROT, PCB(MC-5)		CRE1A097	1		
	P20	nsp	SUPPORT, PCB(MC-10)		CRE1A098	1		
	P21	nsp	INSULATOR		CMX1A289	1		
	P22	nsp	INSULATOR		CMX1A284	1		
	P23	943471011900D	COVER, SIDE L	White model	CKD1A072W4	1	*	⚠5
	P23	943404100380D	COVER, SIDE L	Black model	CKD1A072B60	1	*	⚠5
	P24	943471011910D	COVER, SIDE R	White model	CKD1A073W4	1	*	⚠5
	P24	943404100390D	COVER, SIDE R	Black model	CKD1A073B60	1	*	⚠5
	P25	nsp	LOCKER		CRE1A037	4		
	P26	nsp	SHEET		CMX1A293	1		

	Ref. No.	Part No.	Part Name	Remarks		Q'ty	New	
	P27	nsp	COVER, SHIELD		CMX1A294	1		
	P28	nsp	RUBBER		CHG1A113	1		
	P29	nsp	PEF 5X8		CHG1A490	2		
	P30	nsp	RUBBER		CHG1A491	2		
	P31	943454100020D	FIXING, BOARD		CMH1A323	1	*	3
	P32	943432100020D	HIMELON, TAPE		CHS1A032	1	*	3
	C1	nsp	DISPLAY PCB ASS'Y		COP12347B	1		
	C2	nsp	MAIN PCB ASS'Y	E2,E1C	COP12316F	1		5
	C2	nsp	MAIN PCB ASS'Y	E3	COP12316E	1		
⚠	C3	nsp	SMPS PCB ASS'Y	E2,E1C	COP12319E	1		5
⚠	C3	nsp	SMPS PCB ASS'Y	E3	COP12319G	1		
	C4	943183009250S	MODULE , TUNER (EUR)	E2,E1C	CNVMT104MS1-80A	1		5
	C4	943183011920D	MODULE , TUNER (USA)	E3	CNVMT004MS0-80	1		
	C5	8U6321011200D	IPOD DOCK CON UNIT		CUP12347Z	1		
	C6	8U6321000200S	ETHERNET PCB ASS'Y		COP12348B	1		4
	C7	8R1821000100S	WLAN MODULE		CNVCR870-2G	1		
	C8	943302009630S	MECHANISM ASS'Y (CJDL2130BZ)		CJDL2130BZ	1		2
	C9	943179011170S	OLED MODULE		CFLMXS4003-A	1		
	C10	nsp	SUPPORT PCB ASS'Y		-	2		
	C11	nsp	PLUG, WIFI ANT ASS'Y		-	1		
SCREWS								
	S1	nsp	SCREWS		CTB3+6JR	28		
	S2	nsp	SCREWS		CTB3+8JR	14		5
	S3	nsp	SCREWS		CTB3+10JR	21		5
	S4	nsp	SCREWS		CTB3+6FFZR	10		
	S5	nsp	SCREWS		CTB3+8JFZR	2		
	S6	nsp	SCREWS		CTB3+10JFZ	7		
	S7	nsp	SCREWS		CTB26+8JFR	3		
	S8	nsp	SCREWS		CTS3+8JR	6		
	S9	nsp	SCREWS		CTW3+8JR	12		5
	S10	nsp	SCREWS		CTW3+12JR	3		
WIRES								
	★ 101	943606011980S	CABLE , CARD(1.0MM, 23P, 150MM, B TYPE)		CWC4F4A23A120B08	1	*	
	★ 102	943606011340S	CABLE , CARD(1.25MM, 11P, 80MM, B TYPE)		CWC4F4A11B080B08	1		

PACKING VIEW

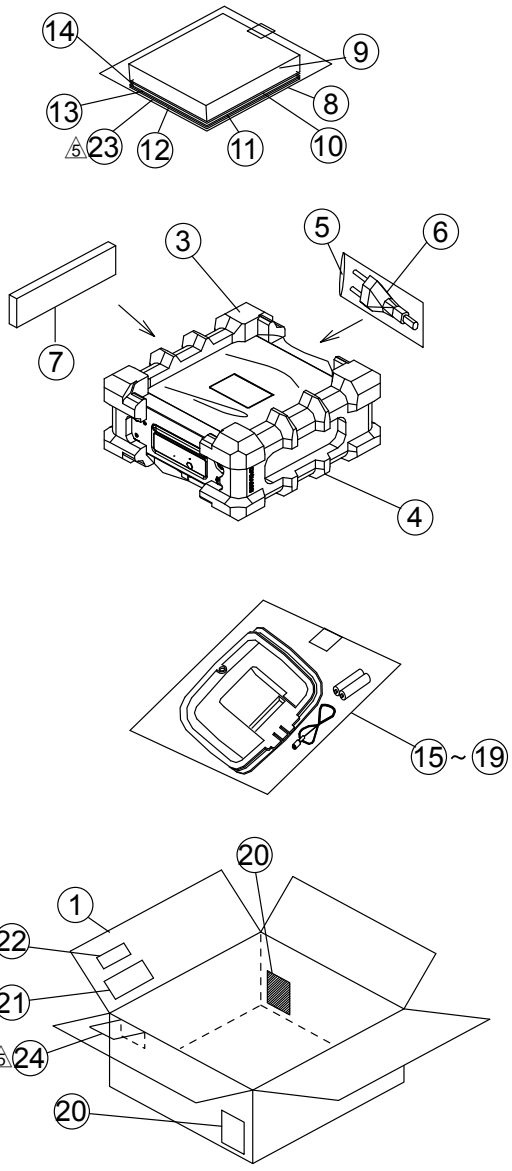

PARTS LIST OF PACKING & ACCESSORIES

*Parts for which "nsp" is indicated on this table cannot be supplied.

*The parts listed below are for maintenance only, might differ from the parts used in the unit in appearances or dimensions.

Note: The symbols in the column "Remarks" indicate the following destinations.

E3 : U.S.A. & Canada model E2 : Europe model E1C : China model △5

	Ref. No.	Part No.	Part Name	Remarks		Q'ty	New	
	1	943531011930D	BOX, OUT CARTON	E2 White model	CPG1A932Z	1	*	△5
	1	943531011940D	BOX, OUT CARTON	E3 White model	CPG1A932Y	1	*	△5
	1	53121017900AD	BOX, OUT CARTON	E1C White model	CPG1A932W	1	*	△5
	1	53121018000AD	BOX, OUT CARTON	Black model	CPG1A932R	1	*	△5
	2	nsp	BAG , POLY(SET)	White model	CPB1A184Z	1		△5
	2	nsp	UNWOVEN CLOTH	Black model	CHS1A202	1		△5
	3	943533011950D	PAD, EPS L		CPS1A887	1	*	
	4	943533011960D	PAD, EPS R		CPS1A888	1	*	
	5	nsp	BAG , POLY		CPB1A008Z	1		
⚠	6	943611000190S	CORD , POWER EUR(H03VVH2-F 2X0.75MM NM)	E2	CJA2B108ZV	1		
⚠	6	943611000230S	CORD , POWER UL(NISPT-2 18/2 105C)	E3	CJA2A107ZV	1		
⚠	6	943611500440S	CORD , POWER CN	E1C	CJA2N078Z	1		△5

	Ref. No.	Part No.	Part Name	Remarks		Q'ty	New	
	7	307010080001D	REMOCON TRANSMITER ASS'Y (RCD-N7)	White model	CARTRCDN7	1	*	⚠5
	7	30701000600AD	REMOCON TRANSMITER ASS'Y (RCD-N7)	Black model	CARTRCDN7BK	1	*	⚠5
	8	nsp	BAG , POLY(ENGLISH/FRANCH)		CPB1061W	1		
	9	541110540104D	MANUAL, INSTRUCTION	E2	CQX1A1575Z	1	*	⚠5
	9	541110541107D	MANUAL, INSTRUCTION	E3	CQX1A1576Z	1	*	⚠5
	9	54111000500AD	MANUAL, INSTRUCTION	E1C	CQX1A1578Z	1	*	⚠5
	10	nsp	SETUP GUIDE A	E2,E3	CQE1A492Z	1	*	⚠5
	10	nsp	SETUP GUIDE C	E1C	CQE1A529Z	1	*	⚠5
	11	nsp	SETUP GUIDE B	E2	CQE1A493Z	1	*	
	12	nsp	CARD , WARRANTY	E3	CQE1A224R	1		
	13	nsp	LIST , S.S (104D)	E2	CQE1A226Q	1		
	13	nsp	LIST , S.S	E3	CQE1A226P	1		
	14	nsp	SHEET , THANK YOU NOTE 100th		CQB549010052008S-DM	1		
	15	nsp	BAG , POLY(ENGLISH/FRANCH)		CPB1061W	1		
	16	90M-ZA000240R	ANT , AM LOOP		CSA1A020Z	1		
	17	90M-ZA000220R	FM 1 POLE ANT		CSA1A018Z	1		
	18	nsp	BATTERY , AAA 2PCS IN PACK		CABR03PPB	2		
	19	943116011970S	WIFI ANTENNA		CSA274Z	1	*	
	20	nsp	CONTROL, LABEL		CQB1A993Z	1		
	21	nsp	LABEL, WIFI	E2	CQB1A1027Z	1		
	22	nsp	LABEL, LAST FM	E2 Black model	CQB1A1025Z	1		⚠5
	23	nsp	CARD FOR CHINA INDENTIFICATION	E1C	CQE1A450Z	1		⚠5
	24	nsp	WARRANTY CHINA	E1C	CQE1A473Y	1		⚠5

SEMICONDUCTORS

Only major semiconductors are shown, general semiconductors etc. are omitted to list.
The semiconductor which described a detailed drawing in a schematic diagram are omitted to list.

1. IC's

R5F64169DFD (MAIN : IC11, DISPLAY : IC81)

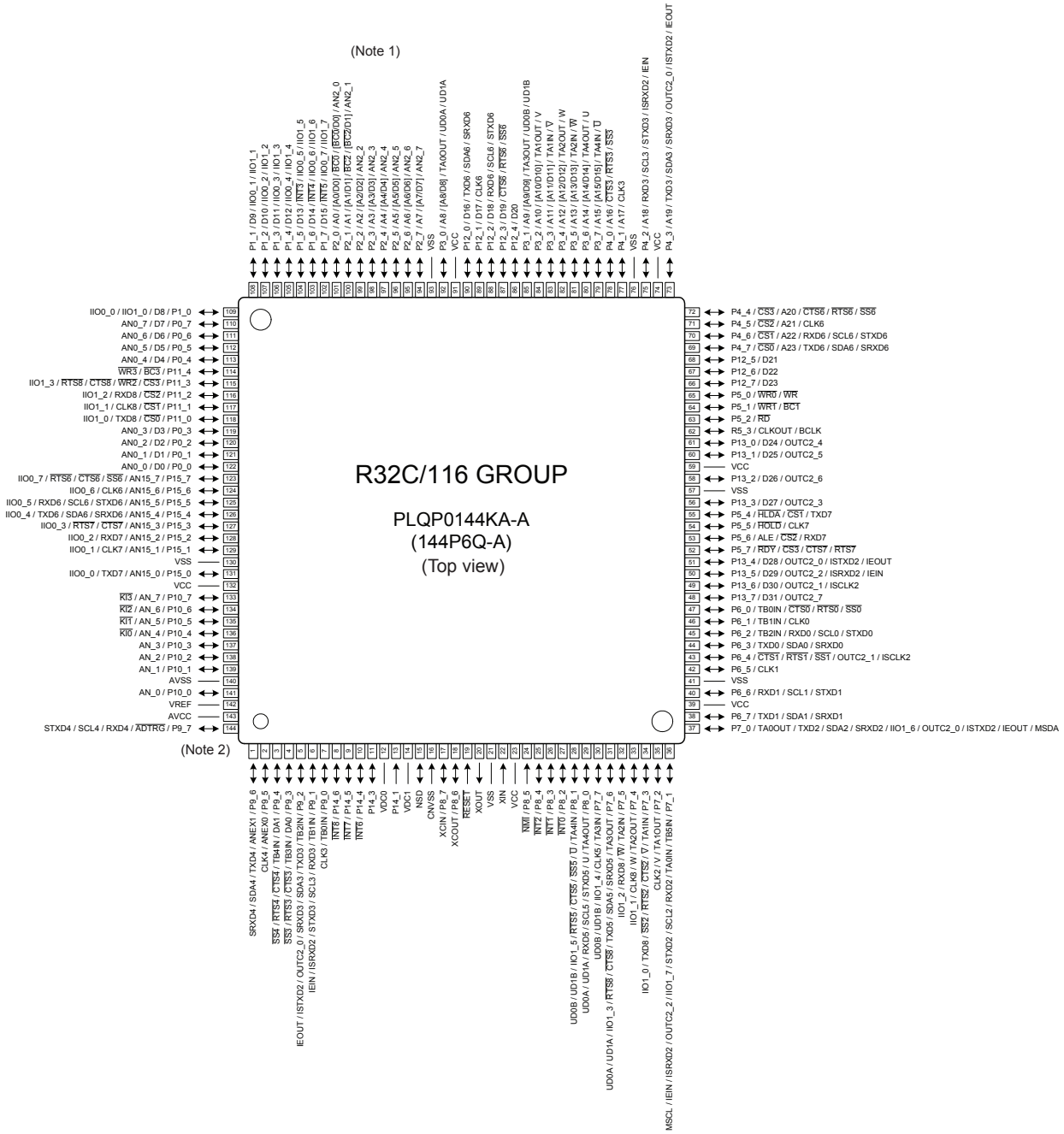

Notes:
1. Pin names in brackets [ ] represent a functional signal as a whole and should not be considered as two separate pins.
2. The position of pin number 1 varies by product. Refer to the index mark in attached “Package Dimensions”.

5F64169DFD (MAIN : IC11) Terminal Function

Pin No	Pin Name	Port Name	PU/ PD	I/O	STBY	Network STBY	Note
1	P96/(TXD4)	UART_MOSI	-	O	O/L	O/L	Transfer Data for Display ucom at Updating
2	(P95)/CLK4	LED_CONT1	PD	O	O/L	O/L	LED Control1
3	P94/($\overline{CTS4}$)	LED_CONT2	PD	O	O/L	O/L	LED Control2
4	P93/($\overline{CTS3}$)	OLED_CPU_POWER	PD	O	O/L	O/L	Power Control for Display ucom
5	P92/TXD3	EL_MOSI	-	O	O/L	O/L	Display Data for Display ucom
6	P91/RXD3	EL_MISO	PD	I	I	I	Display Data from Display ucom
7	P90/(CLK3)	EL_CLK	-	O	O/L	O/L	Clock of Display Data for Display ucom
8	(P146)/$\overline{INT8}$	RDS_CLK	PD	I	I	I	RDS Clock input(interrupt)
9	P145/$\overline{INT7}$	P_DOWN_50/60	PU	I	I	I	Power Down Detection/signal for Clock
10	P144/$\overline{INT6}$	SP_PROTECT	PU	I	I	I	DC Protection Detection
11	P143	EL_CS	-	O	O/H	O/H	Chip Select of Display Data for Display ucom
12	VDC0	VDC0	-	-	-	-	Smoothing capacitor connection terminal
13	P141(INPUT ONLY)	CHECK-1	PD	I	I	I	NC
14	VDC1	VDC1	-	-	-	-	Smoothing capacitor connection terminal
15	NSD	NSD_M	PU	I	-	-	Emulator communication pin
16	CNVSS(INPUT ONLY)	CNVSS	PD	I	-	-	Single-chip / Micro-processor mode switching (Normal single-chip : L, Rewrite boot program start : H input set)
17	P87/(XCIN)	YOBI	-	O	O/L	O/L	Not Use
18	P86/(XCOUT)	CHECK-2	PD	I	I	I	NC
19	RESET	RESET	PU	I	-	-	Reset
20	XOUT	X2	-	-	-	-	Clock(Output)
21	VSS	VSS	-	-	-	-	GND
22	XIN	X1	-	-	-	-	Clock(Input)
23	VCC	VCC1	-	-	-	-	+3V
24	P85/$\overline{NMI}$(INPUT ONLY)	NMI	PU	I	-	-	NC
25	P84/$\overline{INT2}$	AUX1/DET	PU	I	I	I	AUX1(Portable In) Detection
26	P83/$\overline{INT1}$	E_REQ	PD	I	I	I	DM870/860 Interrupt
27	P82/$\overline{INT0}$	RC_IN	PU	I	I	I	IR Interrupt
28	P81	CHECK-3	PD	I	I	I	NC
29	P80/RXD5	HP/DET	PU	I	I	I	H/P Detection
30	(P77)/CLK5	TU_SCL	PU	O	O/L	O/L	Clock for TUNER (I2C)
31	(P76)/TXD5	TU_SDA	PU	O	O/L	O/L	Data for TUNER (I2C)
32	P75/RXD8	E_SPIMIEO	PU	I	I	I	Data from ETHERNET (SPI)
33	P74/CLK8	E_SPICLK	PU	O	O/L	O/L	Clock for ETHERNET (SPI)
34	P73/TXD8	E_SPIMOEI	PU	O	O/L	O/L	Data for ETHERNET (SPI)
35	P72/CLK2	OLED_BOOT	PD	O	O/L	O/L	Boot for Display ucom
36	P71/RXD2/(MSCL)	DAB_DI	-	SI	I	I	Data from DAB (TX)
37	P70/TXD2/(MSDA)	DAB_DO	-	SO	O/L	O/L	Data for DAB (RX)
38	P67/TXD1	TXD/232CMO	-	SO	O/L	O/L	Data transfer to external terminal(AMX)/MITSUBISHI writer
39	VCC	VCC1	-	-	-	-	+3V
40	P66/RXD1	RXD/232CMI	PD	SI	I	I	Data received from the external terminal(AMX)/ MITSUBISHI writer
41	VSS	VSS	-	-	-	-	GND
42	P65/CLK1/SCLK(L)	SCLK_M	PD	O	O/L	O/L	Writing Mode Select
43	P64/BUSY	BUSY_M/STEREO	-	I	I	I	STREO Indicator input/BUSY at Updating
44	P63/TXD0	E_RXDMOEI	PU	SO	O/L	O/L	Network Serial Data Output (DM870/860 RXD)
45	P62/RXD0	E_TXDMIEO	PU	SI	I	I	Network Serial Data Input (DM870/860 TXD)
46	P61/CLK0	KILL_IR	PU	O	O/H	O/H	Control terminal for Front IR Disable
47	P60/$\overline{CTS0}$	/H/P_MUTE	PD	O	O/L	O/L	H/P MUTE
48	P137	EL_RESET	PD	O	O/L	O/L	Reset for Displey ucom
49	P136/ISCLK2	NC	-	O	O/L	O/L	NC
50	P135/ISRXD2	NC	-	O	O/L	O/L	NC
51	P134/ISTXD2	NC	-	O	O/L	O/L	NC
52	P57/$\overline{RDY}$	RDY	PU	I	I	I	NC
53	P56/ALE	ALE	PD	O	O/L	O/L	NC
54	P55/$\overline{HOLD}$/$\overline{EPM}$	EPM_M	PU	I	I	I	Rewrite boot program start : L input set
55	P54/$\overline{HLDA}$	/5142_OTW	PU	I	I	I	TAS5508 Overtemperature warning signal
56	P133	NC	-	O	O/L	O/L	NC
57	VSS	VSS	-	-	-	-	GND
58	P132	NC	-	O	O/L	O/L	NC
59	VCC	VCC2	-	-	-	-	+3V
60	P131	POWER_ON/OFF	PD	O	O/L	O/L	ON/STANDBY Control H:ON/L:STANDBY
61	P130	B_POWER_ON/OFF	PD	O	O/L	O/L	Bi-Amp Select for Power

Pin No	Pin Name	Port Name	PU/ PD	I/O	STBY	Network STBY	Note
62	P53/BCLK	NC	-	O	O/L	O/L	NC
63	P52/$\overline{RD}$	CHECK-4	PD	I	I	I	NC
64	P51/($\overline{WR1}$)/BC1	SRAMSTB	PU	O	O/L	O/L	Control for TC94A92FG SRAMSTB
65	P50/($\overline{WR0}$)/WR/CE	CE_M	PD	I	I	I	Rewrite boot program start : H input set
66	P127	CCE	PU	O	O/L	O/L	Chip Enable for CD DSP
67	P126	BUCK	PU	O	O/L	O/L	BUS Clock for CD DSP
68	P125	NC	-	O	O/L	O/L	NC
69	P47/$\overline{CS0}$/(A23)	BUS3	PU	O	O/L	O/L	BUS3 for CD DSP
70	P46/($\overline{CS1}$)/A22	BUS2	PU	O	O/L	O/L	BUS2 for CD DSP
71	P45/($\overline{CS2}$)/A21	BUS1	PU	O	O/L	O/L	BUS1 for CD DSP
72	P44/($\overline{CS3}$)/A20	BUS0	PU	O	O/L	O/L	BUS0 for CD DSP
73	P43/A19	OPSW	PU	I	I	I	Open SW from CD Mecha
74	VCC	VCC	-	-	-	-	+3V
75	P42/A18	CLSW	PU	I	I	I	Close SW from CD Mecha
76	VSS	VSS	-	-	-	-	GND
77	P41/A17	INSW	PU	I	I	I	Limit SW from CD Mecha
78	P40/A16	DECRST	PU	O	O/L	O/L	Reset for TC94A92FG
79	P37/A15	DREQ	-	I	I	I	TC94A92FG DREQ
80	P36/A14	SBSY	PU	I	I	I	CD Monitor3 (Default: SBSY) from TC94A92FG
81	P35/A13	DRVMUTE	PD	O	O/L	O/L	Motor stanby
82	P34/A12	OPEN	-	O	O/L	O/L	Tray Open
83	P33/A11	CLOSE	-	O	O/L	O/L	Tray Close
84	P32/A10	MX_DETECT	PU	I	I	I	M-XPort Detection
85	P31/A9	/H/P_ON	PU	O	O/L	O/L	TAS5508 Headphone in/out selector
86	P124	/PDN_5508	PD	I	I	I	TAS5508 Power down
87	P123	/5508_MUTE	PD	O	O/L	O/L	TAS5508 Soft mute of outputs
88	P122/(RXD6)	E2PROMSCL	PU	I/O	I	I	Serial Clock for EEPROM (Default:O/L)
89	P121/(CLK6)	E2PROMSDA	PU	I/O	I	I	Serial Data for EEPROM (Default:O/L)
90	P120/(TXD6)	/F_MUTE	PD	O	O/L	O/L	TAS5508 Soft mute of outputs
91	VCC	VCC	-	-	-	-	+3V
92	P30/A8	5508_SCL	PU	I/O	I	I	I2C serial Clock for TAS5508
93	VSS	VSS	-	-	-	-	GND
94	P27/A7	5508_SDA	PU	I/O	I	I	I2C serial data for TAS5508
95	P26/A6	/RESET_5508	PD	O	O/L	O/L	System Reset for TAS5508
96	P25/A5	NC	-	O	O/L	O/L	NC
97	P24/A4	NC	-	O	O/L	O/L	NC
98	P23/A3	NC	-	O	O/L	O/L	NC
99	P22/A2	4683_VOUT	-	I	I	I	AK4683 VOUT Monitor
100	P21/A1	4683_I2C_CONT	GND	I	O/L	O/L	AK4683 Communication format Select
101	P20/A0	5VCPU_ON/ /OFF	PD	O	O/H	O/H	5V Control
102	P17/D15	/4683_RESET	PD	O	O/L	O/L	AK4683 Reset Signal
103	P16/D14	4683_CDTO	-	I	I	I	AK4683 SCI Data Input
104	P15/D13	4683_INT	-	I	I	I	AK4683 Request Signal
105	P14/D12	4683_CDTI	-	O	O/L	O/L	AK4683 SCI Data Output
106	P13/D11	4683_CCLK	-	O	O/L	O/L	AK4683 SCI Clock
107	P12/D10	4683_CSN	-	O	O/L	O/L	AK4683 Chip Enable Signal
108	P11/D9	/5142_SD	PU	I	I	I	TAS5508 Shutdown signal
109	P10/D8	DC_PROTECT1	PU	I	I	I	Power Protection Detect for USB
110	P07/D7	NC	-	O	O/L	O/L	NC
111	P06/D6	NC	-	O	O/L	O/L	NC
112	P05/D5	NC	-	O	O/L	O/L	NC
113	P04/D4	IPOD_DET	PU	I	I	I	iPod Detect (RCD-N7)
114	P114	SW_DOWN	PU	I	I	I	SW LEVEL Detect
115	P113	AMUTE	PD	O	O/L	O/L	AUX/SW MUTE
116	P112/(RXD8)	MX_MUTE	PD	O	O/L	O/L	NC
117	P111/	DAB-P_CONT	PD	O	O/L	O/L	Power Control for DAB
118	P110/(TXD8)	T.MUTE	PD	O	O/L	O/L	Mute for TUNER
119	P03/D3	TUNED	PU	I	I	I	Tuned
120	P02/D2	TU_POWER	PD	O	O/L	O/L	Power Control for TUNER
121	P01/D1	RDS_DATA	PD	I	I	I	RDS DATA for Eur Version
122	P00/D0	USB_P.CONT	PD	O	O/L	O/L	USB Power Control
123	P157	DC_PROTECT2	PU	I	I	I	Power Down Detect
124	P156	E_POWER_CONT	PD	O	O/L	O/H	Power Control for DM870/860
125	P155/RXD6	VBUS_MONI	PD	O	O/L	O/L	USB Data Output Enable (RCD-N7)
126	P154/TXD6	/E_SPICS	PU	O	O/L	O/L	DM870/860 SCI Chip Select
127	P153	/E_RESET	PU	O	O/L	O/H	DM870/860 Reset

Pin No	Pin Name	Port Name	PU/ PD	I/O	STBY	Network STBY	Note
128	P152/RXD7	HVBUS_CTL1	PD	O	O/L	O/L	USB1 VBUS Control
129	P151/(CLK7)	FAULT_FLAG1	PU	I	I	I	USB1 VBUS Current Limit Signal
130	VSS	VSS	-	-	-	-	GND
131	P150/TXD7	/B1/B2	PD	O	O/L	O/L	USB BUS Switch Control (RCD-N7)
132	VCC	VCC	-	-	-	-	+3V
133	P107/(AN7)/($\overline{KI3}$)	HVBUS_CTL2	PD	O	O/L	O/L	USB2 VBUS Control (RCD-N7)
134	P106/AN6/$\overline{KI2}$	KEY3	PU	I	I	I	Key Input3
135	P105/AN5/$\overline{KI1}$	KEY2	PU	I	I	I	Key Input2
136	P104/AN4/$\overline{KI0}$	KEY1	PU	I	I	I	Key Input1
137	P103/AN3	FAULT_FLAG2	PU	I	I	I	USB2 VBUS Current Limit Signal (RCD-N7)
138	P102/AN2	LD_CHK	-	I	I	I	Laser Current Check
139	P101/(AN1)	MODEL_1	PU	I	I	I	Version Select
140	AVSS	AVSS	-	-	-	-	GND
141	P100/AN0	MODEL_2	PU	I	I	I	Model Select
142	VREF	VREF	-	-	-	-	+3V
143	AVCC	AVCC	-	-	-	-	+3V
144	(P97)/$\overline{RXD4}$	UART_MISO	-	I	I	I	Receive Data for Display ucom at Updating

R5F64169DFD (DISPLAY : IC81) Terminal Function

Pin No	Port Name	Symbol	I/O	Pull-U/D	Note
1	P96/(TXD4)	NC	O	-	NC
2	(P95)/CLK4	NC	O	-	NC
3	P94/($\overline{CTS4}$)	NC	O	-	NC
4	P93/($\overline{CTS3}$)	NC	O	-	NC
5	P92/TXD3	NC	O	-	NC
6	P91/RXD3	NC	O	-	NC
7	P90/(CLK3)	NC	O	-	NC
8	(P146)/$\overline{INT8}$	NC	O	-	NC
9	P145/$\overline{INT7}$	NC	O	-	NC
10	P144/$\overline{INT6}$	NC	O	-	NC
11	P143	NC	O	-	NC
12	VDC0	VDC0	-	-	Smoothing capacitor connection terminal
13	P141(INPUT ONLY)	NC	I	PD	NC
14	VDC1	VDC1	-	-	Smoothing capacitor connection terminal
15	NSD	NSD	-	PU	Emulator communication pin
16	CNVSS(INPUT ONLY)	CNVSS	I	PD	Single-chip / Micro-processor mode switching (Normal single-chip : L, Rewrite boot program start : H input set)
17	P87/(XCIN)	NC	O	-	NC
18	P86/(XCOUT)	NC	I	PD	NC
19	RESET	OLED_RESET	I	PU	Reset input(Reset ="L")
20	XOUT	X2	-	-	Clock output
21	VSS	VSS	-	-	GND
22	XIN	X1	-	-	Clock input
23	VCC	VCC1	-	-	+3V
24	P85/$\overline{NMI}$	NMI	I	PU	NC
25	P84/$\overline{INT2}$	NC	O	-	NC
26	P83/$\overline{INT1}$	YOBI	O	-	Not use
27	P82/$\overline{INT0}$	OLED_CS	O	-	Chip Select of Display Data for Display ucom
28	P81	NC	I	PD	NC
29	P80/RXD5	BOOT	I	PD	Boot signal
30	(P77)/CLK5	NC	O	-	NC
31	(P76)/TXD5	NC	O	-	NC
32	P75/RXD8	OLED_POWER	O	PD	OLED Power On/Off
33	P74/CLK8	NC	O	-	NC
34	P73/TXD8	NC	O	-	NC
35	P72/CLK2	OLED_CLK	O	-	Clock of Display Data for Display ucom
36	P71/RXD2/(MSCL)	OLED_TX	O	-	Display Data for Display ucom
37	P70/TXD2/(MSDA)	OLED_RX	O	-	Not use
38	P67/TXD1	TXD CO	O	PD	Data transfer to external terminal(AMX)/MITSUBISHI writer
39	VCC	VCC1	-	-	+3V
40	P66/RXD1	RXD CO	I	PD	Data received from the external terminal(AMX)/MITSUBISHI writer
41	VSS	VSS	-	-	GND
42	P65/CLK1/SCLK(L)	SCLK_CO	O	PD	Writing Mode Select
43	P64/BUSY	BUSY_CO	O	-	BUSY Output at updating
44	P63/TXD0	OLED_UART_RX	O	-	Transfer Data for Display ucom at Updating
45	P62/RXD0	OLED_UART_TX	I	-	Receive Data for Display ucom at Updating
46	P61/CLK0	NC	O	-	NC
47	P60/$\overline{CTS0}$	NC	O	-	NC
48	P137	D7	O	-	Data Bus for OLED
49	P136/ISCLK2	D6	O	-	Data Bus for OLED
50	P135/ISRXD2	D5	O	-	Data Bus for OLED
51	P134/ISTXD2	D4	O	-	Data Bus for OLED
52	P57/$\overline{RDY}$	NC	O	-	NC
53	P56/ALE	NC	O	-	NC
54	P55/$\overline{HOLD}$/$\overline{EPM}$	EPM	I	PU	Rewrite boot program start : L input set
55	P54/$\overline{HLDA}$	NC	O	-	NC
56	P133	D3	O	-	Data Bus for OLED
57	VSS	VSS	-	-	GND
58	P132	D2	O	-	Data Bus for OLED
59	VCC	VCC2	-	-	+3V
60	P131	D1	O	-	Data Bus for OLED
61	P130	D0	O	-	Data Bus for OLED
62	P53/BCLK	NC	O	-	NC
63	P52/$\overline{RD}$	NC	I	PD	NC
64	P51/($\overline{WR1}$)/BC1	NC	O	-	NC

Pin No	Port Name	Symbol	I/O	Pull-U/D	Note
65	P50/($\overline{WR}$0)/WR/CE	CE_M	I	PD	Rewrite boot program start : H input set
66	P127	RES#	O	-	Reset, Active "L" for OLED
67	P126	CS#	O	-	Chip Select for OLED
68	P125	D/C#	O	-	Data/Command Control. "H" :Data, "L":Command for OLED
69	P47/$\overline{CS}$0/(A23)	R/W#,WR#	O	-	Write (This pin stays "L"(low) in Serial Interface Mode) for OLED
70	P46/($\overline{CS}$1)/A22	E,RD#	O	-	Read (This pin stays "L"(low) in Serial Interface Mode) for OLED
71	P45/($\overline{CS}$2)/A21	NC	O	-	NC
72	P44/($\overline{CS}$3)/A20	NC	O	-	NC
73	P43/A19	NC	O	-	NC
74	VCC	VCC	-	-	+3V
75	P42/A18	NC	O	-	NC
76	VSS	VSS	-	-	GND
77	P41/A17	NC	O	-	NC
78	P40/A16	NC	O	-	NC
79	P37/A15	NC	O	-	NC
80	P36/A14	NC	O	-	NC
81	P35/A13	NC	O	-	NC
82	P34/A12	NC	O	-	NC
83	P33/A11	NC	O	-	NC
84	P32/A10	NC	O	-	NC
85	P31/A9	NC	O	-	NC
86	P124	NC	O	-	NC
87	P123	NC	O	-	NC
88	P122/(RXD6)	NC	O	-	NC
89	P121/(CLK6)	NC	O	-	NC
90	P120/(TXD6)	NC	O	-	NC
91	VCC	VCC	-	-	+3V
92	P30/A8	NC	O	-	NC
93	VSS	VSS	-	-	GND
94	P27/A7	NC	O	-	NC
95	P26/A6	NC	O	-	NC
96	P25/A5	NC	O	-	NC
97	P24/A4	NC	O	-	NC
98	P23/A3	NC	O	-	NC
99	P22/A2	NC	O	-	NC
100	P21/A1	NC	O	-	NC
101	P20/A0	NC	O	-	NC
102	P17/D15	NC	O	-	NC
103	P16/D14	NC	O	-	NC
104	P15/D13	NC	O	-	NC
105	P14/D12	NC	O	-	NC
106	P13/D11	NC	O	-	NC
107	P12/D10	NC	O	-	NC
108	P11/D9	NC	O	-	NC
109	P10/D8	NC	O	-	NC
110	P07/D7	NC	O	-	NC
111	P06/D6	NC	O	-	NC
112	P05/D5	NC	O	-	NC
113	P04/D4	NC	O	-	NC
114	P114	NC	O	-	NC
115	P113	NC	O	-	NC
116	P112/(RXD8)	NC	O	-	NC
117	P111/	NC	O	-	NC
118	P110/(TXD8)	NC	O	-	NC
119	P03/D3	NC	O	-	NC
120	P02/D2	NC	O	-	NC
121	P01/D1	NC	O	-	NC
122	P00/D0	NC	O	-	NC
123	P157	NC	O	-	NC
124	P156	NC	O	-	NC
125	P155/RXD6	NC	O	-	NC
126	P154/TXD6	NC	O	-	NC
127	P153	NC	O	-	NC
128	P152/RXD7	NC	O	-	NC
129	P151/(CLK7)	NC	O	-	NC
130	VSS	VSS	-	-	GND
131	P150/TXD7	NC	O	-	NC

Pin No	Port Name	Symbol	I/O	Pull-U/D	Note
132	VCC	VCC	-	-	+3V
133	P107/(AN7)/($\overline{KI3}$)	NC	O	-	NC
134	P106/AN6/$\overline{KI2}$	NC	O	-	NC
135	P105/AN5/$\overline{KI1}$	NC	O	-	NC
136	P104/AN4/$\overline{KI0}$	NC	O	-	NC
137	P103/AN3	NC	O	-	NC
138	P102/AN2	NC	O	-	NC
139	P101/(AN1)	NC	O	-	NC
140	AVSS	AVSS	-	-	GND
141	P100/AN0	NC	I	PD	Not use
142	VREF	VREF	-	-	+3V
143	AVCC	AVCC	-	-	+3V
144	(P97)/$\overline{RXD4}$	NC	O	-	NC

TC94A92FG (MAIN : IC21)

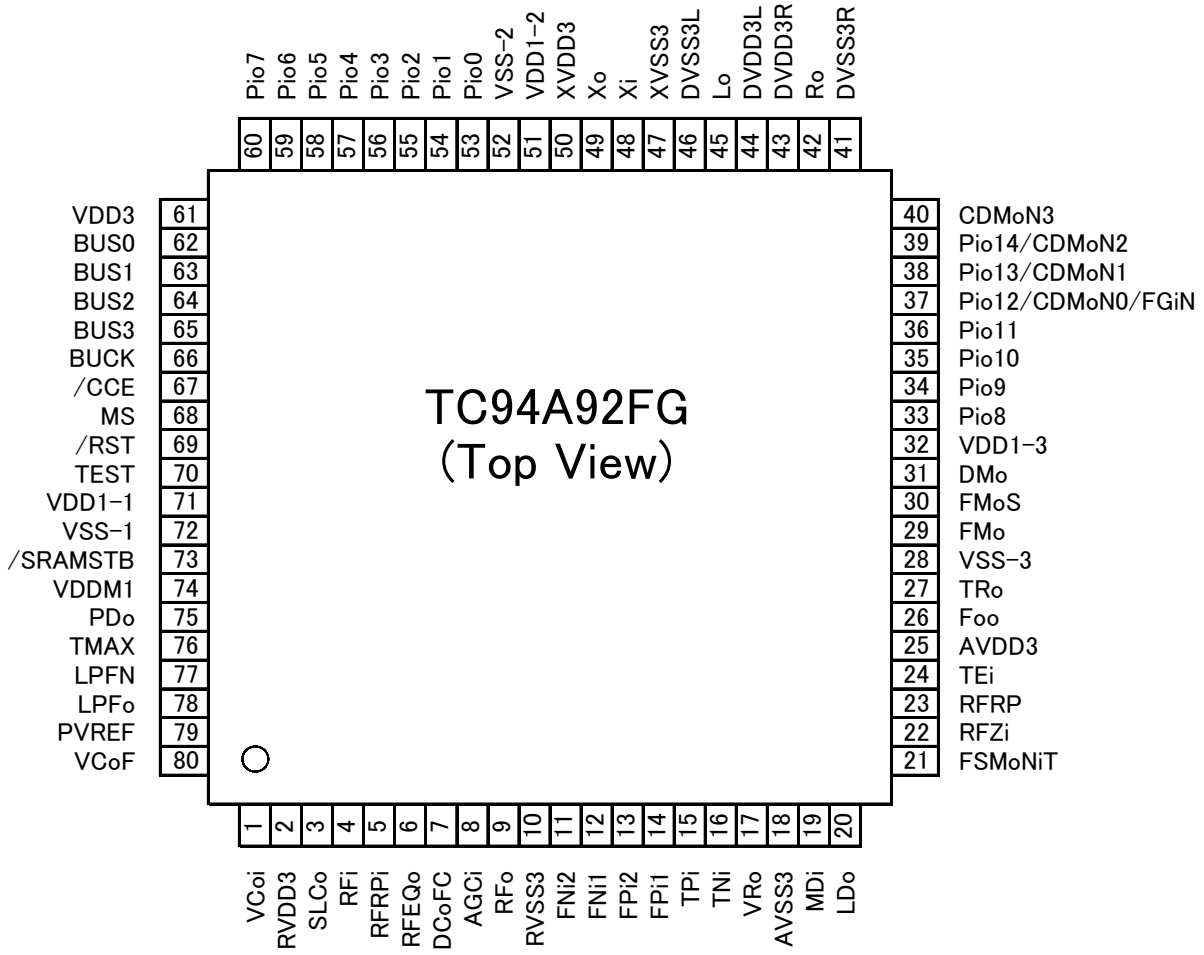

TC94A92FG Block Diagram

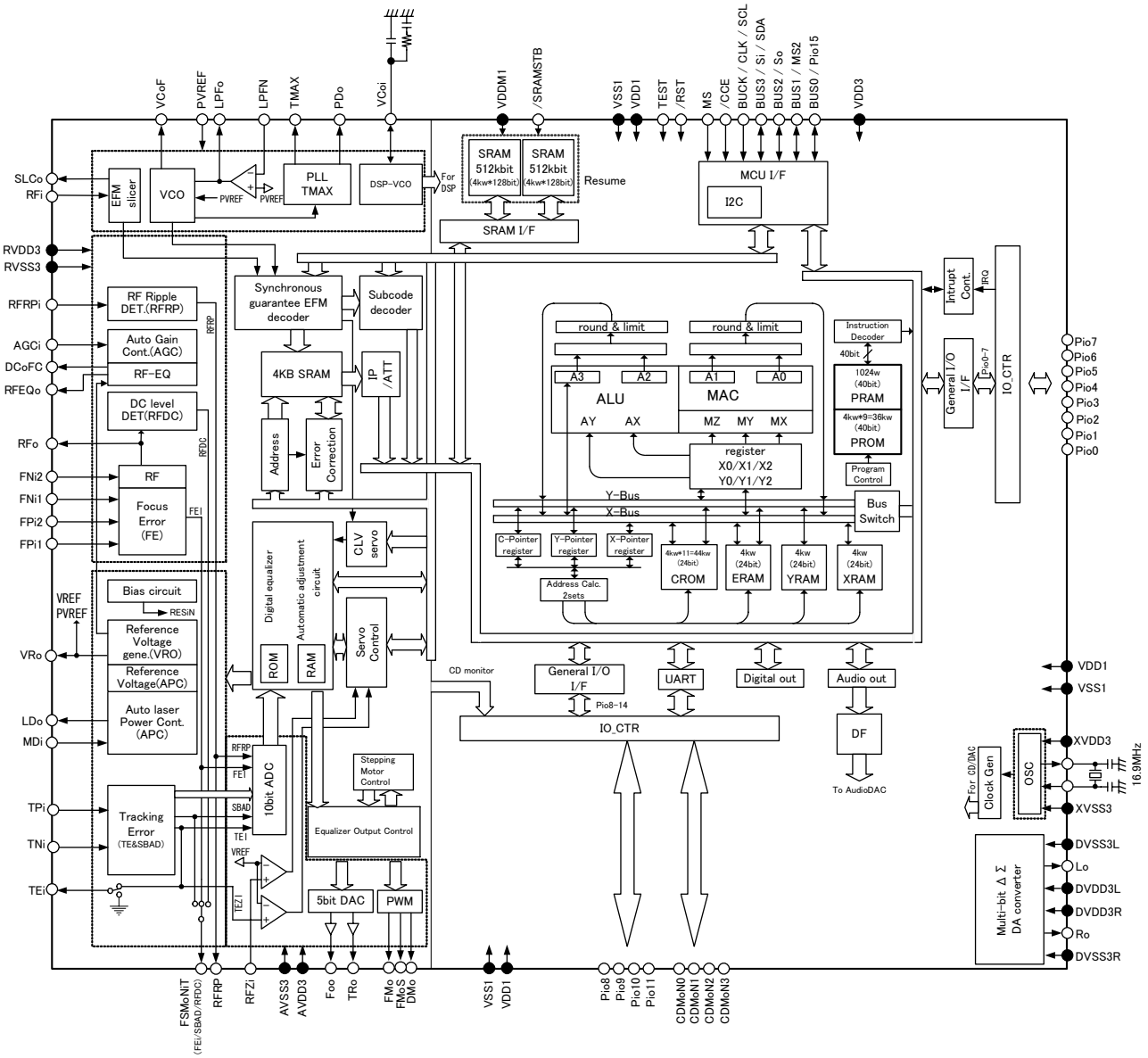

TC94A92FG Terminal Function

Pin No.	Symbol	I/O	Description	Default	Remarks
1	VCoi	O 3AI/F	DSP VCO - EFM and PLCK Phase difference signal output pin. (DSP VCO control voltage inputr pin.)	O	3 state output
2	RVDD3	-	CD-DSP-Power supply for 3.3V RF amplifier core and PLL circuit	-	
3	SLCo	O 3AI/F	EFM slice level output pin	O	Connect capacitor according with se rvo frequency band.
4	RFi	I 3AI/F	RF signal input pin	I	Selectable Zin 20/10 kΩ
5	RFRPi	I 3AI/F	RF ripple signal input pin	I	
6	RFEQo	O 3AI/F	RF equalizer circuit output pin.	O	Connect to RFRPi by 0.1uF, to RFi by 4700pF.
7	DCoFC	O 3AI/F	RFEQo offset compensation LPF output	O	Connect to Vro by more than 0.015uF
8	AGCi	I 3AI/F	RF signal AGC amplifier input pin	I	
9	RFo	O 3AI/F	RF signal generation amplifier output pin	O	
10	RVSS3	-	Grounding pin for 3.3 RF amplifier core and PLL circuit	-	
11	FNI2	I 3AI/F	Main beam signal input pin. To be connected to PIN diode C.	I	
12	FNI1	I 3AI/F	Main beam signal input pin. To be connected to PIN diode A.	I	
13	FPI2	I 3AI/F	Main beam signal input pin. To be connected to PIN diode D.	I	
14	FPI1	I 3AI/F	Main beam signal input pin. To be connected to PIN diode B.	I	
15	TPi	I 3AI/F	Sub beam signal input pin. To be connected to PIN diode F.	I	
16	TNi	I 3AI/F	Sub beam signal input pin. To be connected to PIN diode E.	I	
17	VRo	O 3AI/F	1.65 V reference voltage output pin.	O	Connected to PVREF, And connect to GNG by 0.1uF+100uF.
18	AVSS3	-	Grounding pin for 3.3V CD analog circuits.	-	
19	MDi	I 3AI/F	Monitor photodiode amplifier input pin.	I	Reference Voltage=178mVtyp.
20	LDo	O 3AI/F	Laser diode amplifier output pin	O	

Pin No.	Symbol	I/O	Description	Default	Remarks
21	FSMoNiT	O 3AI/F	Focus Error signal / Sub beam add signal output pin(monitor pin/GND)	O	
22	RFZi	I 3AI/F	RF ripple zero-cross signal Input pin	I	
23	RFRP	O 3AI/F	RF ripple signal output pin.	O	
24	TEi	O 3AI/F	Tracking error signal output pin.	O	Bulit-in serises R=500Ω. Connect to VRo by capacitor.
25	AVDD3	-	Power supply pin for 3.3 V CD analog circuits.	-	
26	FOo	O 3AI/F	Focus servo equalizer output pin.	O	Bulit-in serises R=3.3 kΩ
27	TRo	O 3AI/F	Tracking servo equalizer output pin.	O	Bulit-in output R=3.3 kΩ
28	VSS-3	-	Grounding pin for 1.5V Decoder-DSP CD circuit	-	
29	FMo	O 3AI/F	Feed servo equalizer output pin.	O	Bulit-in output R=3.3 kΩ
30	FMoS	O 3AI/F	Feed servo equalizer output pin. (Stepper motor application)	O	Bulit-in output R=3.3 kΩ
31	DMo	O 3AI/F	Disc servo equalizer output pin	O	Bulit-in output R=3.3 kΩ
32	VDD1-3	I/O 3I/F	Power supply pin for 1.5V Decoder-DSP /CD circuit	-	
33	Pio8	I/O 3I/F	Port 8（General Input/Output Port ）	I	CMOS Port Schmitt input Refer to [1.2 Pin Assinment Table]
34	Pio9	I/O 3I/F	Port 9（General Input/Output Port ）	I	CMOS Port Schmitt input Refer to [1.2 Pin Assinment Table]
35	Pio10	I/O 3I/F	Port 10（General Input/Output Port ）	I	CMOS Port Schmitt input Refer to [1.2 Pin Assinment Table]
36	Pio11	I/O 3I/F	Port 11（General Input/Output Port ）	I	CMOS Port Schmitt input Refer to [1.2 Pin Assinment Table]
37	Pio12/ CDMoN0/ FGiN	I/O 3I/F	Port 12（General Input/Output Port ） / CD Monitor 0 / FG signal input	I	CMOS Port Schmitt input Refer to [1.2 Pin Assinment Table]
38	Pio13/ CDMoN1	I/O 3I/F	Port 13（General Input/Output Port ） / CD Monitor1	I	CMOS Port Schmitt input Refer to [1.2 Pin Assinment Table]
39	Pio14/ CDMoN2	I/O 3I/F	Port 14（General Input/Output Port ） / CD Monitor 2	I	CMOS Port Schmitt input Refer to [1.2 Pin Assinment Table]
40	CDMoN3	O 3I/F	CD Monitor3 (Default output : SBSY)	O	CMOS Port Refer to [1.2 Pin Assinment Table]

Pin No.	Symbol	I/O	Description	Default	Remarks
41	DVSS3R	-	Grounding pin for 3.3V Muiti-Bit DAC circuit	-	
42	Ro	O 3AI/F	R channel audio output pin of Audio DAC.	O	
43	DVDD3R	-	Power supply pin for 3.3V Audio DAC circuit.	-	
44	DVDD3L	-	Power supply pin for 3.3V Audio DAC circuit.	-	
45	Lo	O 3AI/F	L channel audio output pin of Audio DAC	O	
46	DVSS3L	-	Grounding pin for 3.3V Muiti-Bit DAC Circuit	-	
47	XVSS3	-	Grounding pin for 3.3V clock oscillator circuit	-	
48	Xi	I 3AI/F	System clock Input pin	I	Xtal oscillation circuit. Connect feedback resistor 1 MΩ between Xo and Xi
49	Xo	O 3AI/F	System clock Output pin	O	
50	XVDD3	-	Power Supply pin for 3.3V clock oscillator circuit	-	
51	VDD1-2	-	Power Supply pin for 1.5V Digital circuit	-	
52	VSS-2	-	Grounding pin for 1.5V digital circuit	-	
53	Pio0	I/O 3I/F	Port 0（General Input/Output Port ）	I	CMOS Port Schmitt input Refer to [1.2 Pin Assinment Table]
54	Pio1	I/O 3I/F	Port 1（General Input/Output Port ）	I	CMOS Port Schmitt input Refer to [1.2 Pin Assinment Table]
55	Pio2	I/O 3I/F	Port 2（General Input/Output Port ）	I	CMOS Port Schmitt input Refer to [1.2 Pin Assinment Table]
56	Pio3	I/O 3I/F	Port 3（General Input/Output Port ）	I	CMOS Port Schmitt input Refer to [1.2 Pin Assinment Table]
57	Pio4	I/O 3I/F	Port 4（General Input/Output Port ）	I	CMOS Port Schmitt input Refer to [1.2 Pin Assinment Table]
58	Pio5	I/O 3I/F	Port 5（General Input/Output Port ）	I	CMOS Port Schmitt input Refer to [1.2 Pin Assinment Table]
59	Pio6	I/O 3I/F	Port 6（General Input/Output Port）	I	CMOS Port Schmitt input Refer to [1.2 Pin Assinment Table]
60	Pio7	I/O 3I/F	Port 7（General Input/Output Port ）	I	CMOS Port Schmitt input Refer to [1.2 Pin Assinment Table]

Pin No.	Symbol	I/O	Description	Default	Remarks
61	VDD3	-	Power Supply pin for 3.3V Digital circuit	-	
62	BUS0	I/O 3I/F	Microprocessor I/F data input/output pin 0	I	CMOS Port Schmitt input Refer to [1.2 Pin Assinment Table]
63	BUS1	I/O 3I/F	Microprocessor I/F data input/output pin 1	I	CMOS Port Schmitt input Refer to [1.2 Pin Assinment Table]
64	BUS2	I/O 3I/F	Microprocessor I/F data input/output pin 2	I	CMOS Port Schmitt input Refer to [1.2 Pin Assinment Table]
65	BUS3	I/O 3I/F	Microprocessor I/F data input/output pin 3	I	CMOS Port Schmitt input Refer to [1.2 Pin Assinment Table]
66	BUCK	I 3I/F	Microprocessor I/F BUS clock Input pin	I	Schmitt input Refer to [1.2 Pin Assinment Table]
67	/CCE	I 3I/F	Microprocessor I/F chip enable input pin	I	Schmitt input Refer to [1.2 Pin Assinment Table]
68	MS	I 3I/F	Microprocessor I/F mode selection pin. "H": Parallel I/F, "L": Serial I/F	I	Refer to [1.2 Pin Assinment Table]
69	/RST	I 3I/F	Reset Input pin	I	Schmitt input
70	Test	I 3I/F	Test pin ("L" fixed)	I	Connect to GND for normal operation
71	VDD1-1	-	Power Supply pin for 1.5V Digital circuit	-	
72	VSS-1	-	Grounding pin for 1.5V Digital circuit	-	
73	/SRAMSTB	I 3I/F	1Mbit SRAM stand by pin(/SRAMSTB="L")	I	
74	VDDM1	-	Power Supply for 1.5V 1Mbit SRAM circuit	-	
75	PDo	O 3AI/F	EFM and PLCK Phase difference signal output pin.	O	4-state output (RVDD3, RVSS3,PVREF, Hiz)
76	TMAX	O 3AI/F	TMAX detection result output pin	O	3-state output (RVDD3, RVSS3, Hiz)
77	LPFN	I 3AI/F	PLL circuit LPF amplifier inversion input pin	I	
78	LPFo	O 3AI/F	PLL circuit LPF amplifier Output pin	O	
79	PVREF	-	PLL circuit 1.65 V reference voltage pin.	-	Connected to VRO. Connect to GND by 0.1uF and 100uF.
80	VCoF	O 3AI/F	VCO filter pin	O	Connect to GND by 0.01uF

3A I/F : 3 V analog circuit input/output pin.
1.5 I/F : 1.5Vdigital input/output pin.
3 I/F : 3 V digital input/output pin.

IP4001CRLTF (MAIN : IC31)

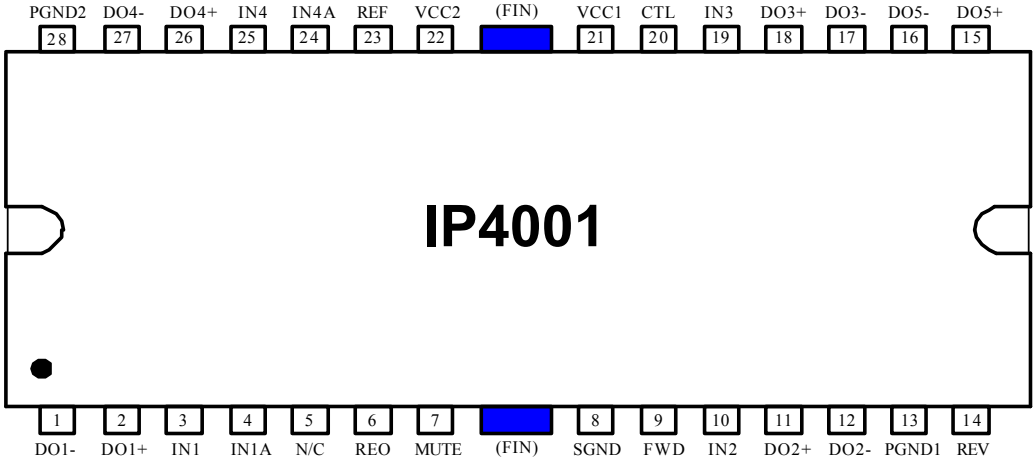

IP4001CRLTF Block Diagram

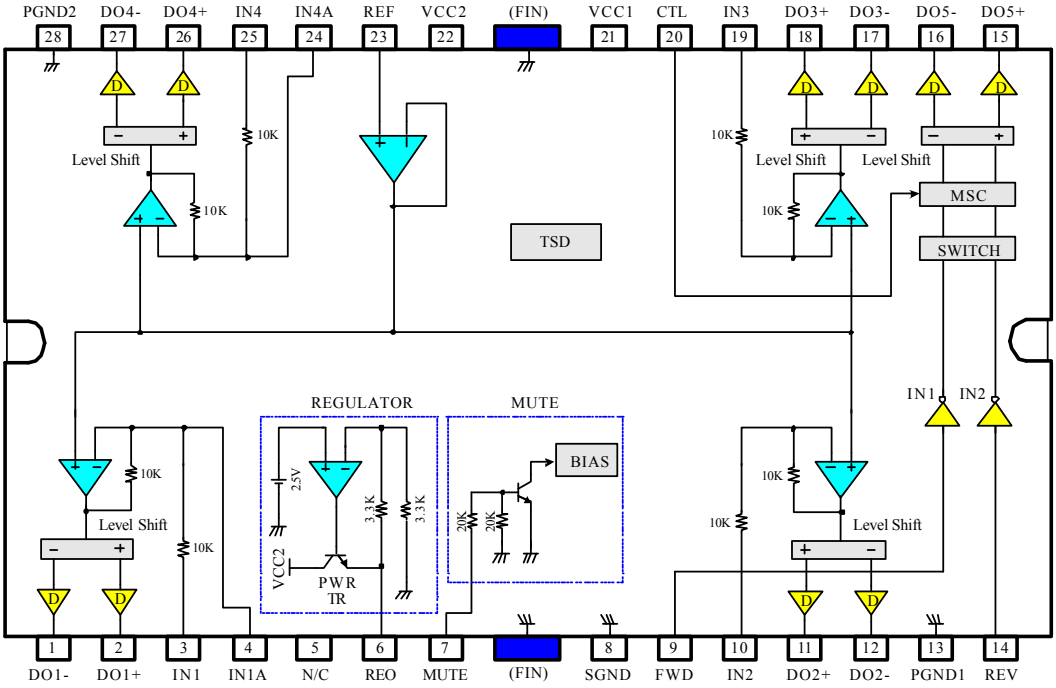

IP4001CRLTF Pin Discriptions

NO	SYMBOL	I/O	DESCRIPTION	NO	SYMBOL	I/O	DESCRIPTION
1	DO1-	O	CH1 OUTPUT (-)	15	DO5+	O	CH5 OUTPUT (+)
2	DO1+	O	CH1 OUTPUT (+)	16	DO5-	O	CH5 OUTPUT (-)
3	IN1	I	CH1 INPUT 1	17	DO3-	O	CH3 OUTPUT (-)
4	IN1A	I	CH1 INPUT 2	18	DO3+	O	CH3 OUTPUT (+)
5	N / C	-	NO-CONNECTION	19	IN3	I	CH3 INPUT
6	REO	O	REGULATOR OUTPUT	20	CTL	I	CH5 MOTOR SPEED CONTROL
7	MUTE	I	MUTE INPUT	21	VCC1	I	SUPPLY VOLTAGE 1 (CH2,CH3,CH5)
8	SGND	-	SIGNAL GROUND	22	VCC2	I	SUPPLY VOLTAGE 2 (CH1,CH4,SIGNAL,REG)
9	FWD	I	CH5 INPUT 1	23	REF	I	CH BIAS INPUT
10	IN2	I	CH2 INPUT	24	IN4A	I	CH4 INPUT 1
11	DO2+	O	CH2 OUTPUT (+)	25	IN4	I	CH4 INPUT 2
12	DO2-	O	CH2 OUTPUT (-)	26	DO4+	O	CH4 OUTPUT (+)
13	PGND1	-	POWER GROUND 1	27	DO4-	O	CH4 OUTPUT (-)
14	REV	I	CH5 INPUT 2	28	PGND2	-	POWER GROUND 2

AK4683 (MAIN : IC41)

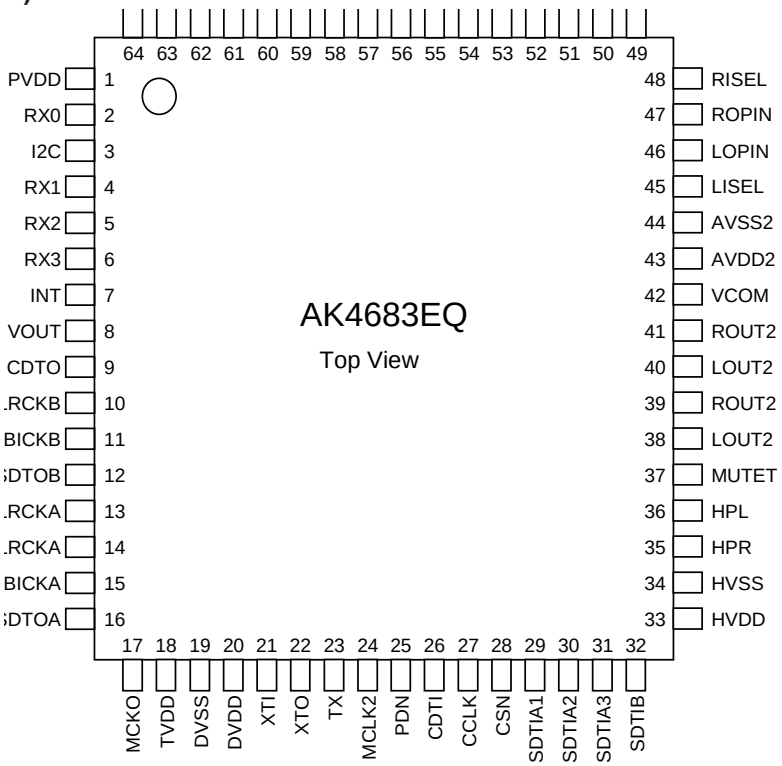

AK4683 Block Diagram

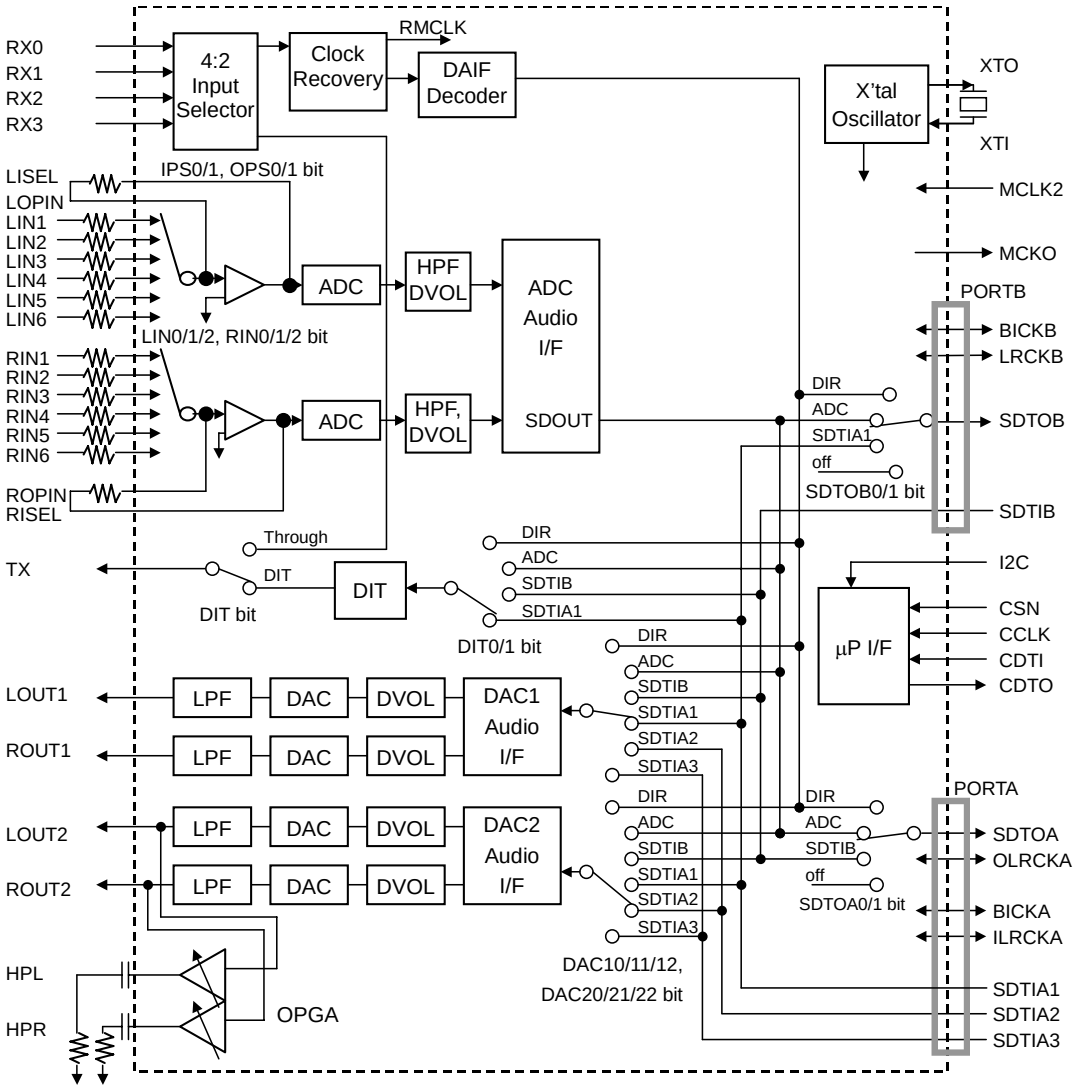

AK4683 Pin Discriptions

No.	Pin Name	I/O	Function
1	PVDD	-	PLL Power supply Pin, 4.5V~5.5V
2	RX0	I	Receiver Channel 0 Pin (Internal biased pin. Internally biased at PVDD/2)
3	I2C	I	Control Mode Select Pin. "L": 4-wire Serial, "H": I^2C Bus
4	RX1	I	Receiver Channel 1 Pin
5	RX2	I	Receiver Channel 2 Pin
6	RX3	I	Receiver Channel 3 Pin
7	INT	O	Interrupt Pin
8	VOUT	O	V-bit Output Pin for Receiver Input
	DZF	O	Zero Input Detect Pin When the input data of DAC follow total 8192 LRCK cycles with "0" input data, this pin goes to "H". And when RSTN1 bit is "0", PWDA bit is "0", this pin goes to "H".
	OVF	O	Analog Input Overflow Detect Pin This pin goes to "H" if the analog input of Lch or Rch overflows.
9	CDTO	O	Control Data Output Pin in Serial Mode and I2C pin = "L".
10	LRCKB	I/O	Channel Clock B Pin
11	BICKB	I/O	Audio Serial Data Clock B Pin
12	SDTOB	O	Audio Serial Data Output B Pin
13	OLRCKA	I/O	Output Channel Clock A Pin
14	ILRCKA	I/O	Input Channel Clock A Pin
15	BICKA	I/O	Audio Serial Data Clock A Pin
16	SDTOA	O	Audio Serial Data Output A Pin
17	MCKO	O	Master Clock Output Pin
18	TVDD	-	Output Buffer Power Supply Pin, 2.7V~5.5V
19	DVSS	-	Digital Ground Pin, 0V
20	DVDD	-	Digital Power Supply Pin, 4.5V~5.5V
21	XTI	I	X'tal Input Pin
22	XTO	O	X'tal Output Pin
23	TX	O	Transmit Channel Output pin When DIT bit = "0", RX0~3 Through. When DIT bit = "1", Internal DIT Output.
24	MCLK2	I	Master Clock Input Pin
25	PDN	I	Power-Down Mode & Reset Pin When "L", the AK4683 is powered-down, all registers are reset. And then all digital output pins go "L". The AK4683 must be reset once upon power-up.
26	CDTI	I	Control Data Input Pin in Serial Mode and I2C pin = "L".
	SDA	I/O	Control Data Pin in Serial Mode and I2C pin = "H".
27	CCLK	I	Control Data Clock Pin in Serial Mode and I2C pin = "L"
	SCL	I	Control Data Clock Pin in Serial Mode and I2C pin = "H"
28	CSN	I	Chip Select Pin in Serial Mode and I2C pin = "L".
	TEST	I	This pin should be connected to DVSS in Serial Mode and I2C pin = "H".
29	SDTIA1	I	Audio Serial Data Input A1 Pin
30	SDTIA2	I	Audio Serial Data Input A2 Pin
31	SDTIA3	I	Audio Serial Data Input A3 Pin
32	SDTIB	I	Audio Serial Data Input B Pin
33	HVDD	-	HP Power Supply Pin, 4.5V~5.5V
34	HVSS	-	HP Ground Pin, 0V
35	HPR	O	HP Rch Output Pin
36	HPL	O	HP Lch Output Pin
37	MUTET	-	HP Common Voltage Output Pin 1μF capacitor should be connected to HVSS externally.

No.	Pin Name	I/O	Function
38	LOUT2	O	DAC2 Lch Positive Analog Output Pin
39	ROUT2	O	DAC2 Rch Positive Analog Output Pin
40	LOUT1	O	DAC1 Lch Positive Analog Output Pin
41	ROUT1	O	DAC1 Rch Positive Analog Output Pin
42	VCOM	-	DAC/ADC Common Voltage Output Pin 2.2µF capacitor should be connected to AVSS2 externally.
43	AVDD2	-	DAC Power Supply Pin, 4.5V~5.5V
44	AVSS2	-	DAC Ground Pin, 0V
45	LISEL	O	Lch Feedback Resistor Output Pin
46	LOPIN	O	Lch Feedback Resistor Input Pin, 0.5xAVDD1
47	ROPIN	O	Rch Feedback Resistor Input Pin. 0.5xAVDD1
48	RISEL	O	Rch Feedback Resistor Output Pin
49	AVSS1	-	ADC Ground Pin, 0V
50	AVDD1	-	ADC Power Supply Pin, 4.5V~5.5V
51	LIN1	I	Lch Input 1 Pin
52	RIN1	I	Rch Input 1 Pin
53	LIN2	I	Lch Input 2 Pin
54	RIN2	I	Rch Input 2 Pin
55	LIN3	I	Lch Input 3 Pin
56	RIN3	I	Rch Input 3 Pin
57	LIN4	I	Lch Input 4 Pin
58	RIN4	I	Rch Input 4 Pin
59	LIN5	I	Lch Input 5 Pin
60	RIN5	I	Rch Input 5 Pin
61	LIN6	I	Lch Input 6 Pin
62	RIN6	I	Rch Input 6 Pin
63	PVSS	-	PLL Ground pin
64	R	-	External Resistor Pin 12kΩ +/-1% resistor should be connected to PVSS externally.

TAS5142 (MAIN : IC71,72)

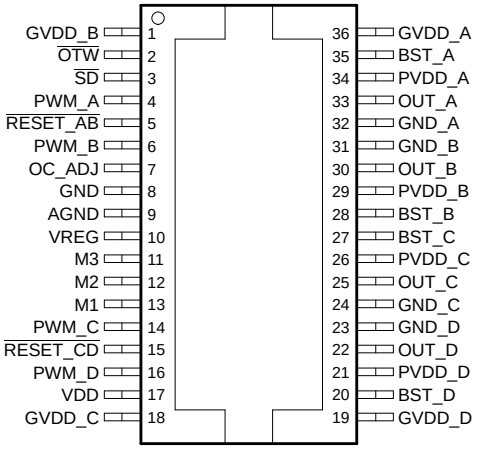

TAS5142 Pin Discriptions

TERMINAL			FUNCTION (1)	DESCRIPTION
NAME	DKD NO.	DDV NO.		
AGND	9	11	P	Analog ground
BST_A	35	43	P	HS bootstrap supply (BST), external capacitor to OUT_A required
BST_B	28	34	P	HS bootstrap supply (BST), external capacitor to OUT_B required
BST_C	27	33	P	HS bootstrap supply (BST), external capacitor to OUT_C required
BST_D	20	24	P	HS bootstrap supply (BST), external capacitor to OUT_D required
GND	8	10	P	Ground
GND_A	32	38	P	Power ground for half-bridge A
GND_B	31	37	P	Power ground for half-bridge B
GND_C	24	30	P	Power ground for half-bridge C
GND_D	23	29	P	Power ground for half-bridge D
GVDD_A	36	44	P	Gate-drive voltage supply requires 0.1-μF capacitor to AGND
GVDD_B	1	1	P	Gate-drive voltage supply requires 0.1-μF capacitor to AGND
GVDD_C	18	22	P	Gate-drive voltage supply requires 0.1-μF capacitor to AGND
GVDD_D	19	23	P	Gate-drive voltage supply requires 0.1-μF capacitor to AGND
M1	13	15	I	Mode selection pin
M2	12	14	I	Mode selection pin
M3	11	13	I	Mode selection pin
NC	–	3, 4, 19, 20, 25, 42	–	No connect. Pins may be grounded.
OC_ADJ	7	9	O	Analog overcurrent programming pin requires resistor to ground
$\overline{\text{OTW}}$	2	2	O	Overtemperature warning signal, open-drain, active-low
OUT_A	33	39	O	Output, half-bridge A
OUT_B	30	36	O	Output, half-bridge B
OUT_C	25	31	O	Output, half-bridge C
OUT_D	22	28	O	Output, half-bridge D
PVDD_A	34	40, 41	P	Power supply input for half-bridge A requires close decoupling of 0.1-μF capacitor to GND_A.
PVDD_B	29	35	P	Power supply input for half-bridge B requires close decoupling of 0.1-μF capacitor to GND_B.
PVDD_C	26	32	P	Power supply input for half-bridge C requires close decoupling of 0.1-μF capacitor to GND_C.
PVDD_D	21	26, 27	P	Power supply input for half-bridge D requires close decoupling of 0.1-μF capacitor to GND_D.
PWM_A	4	6	I	Input signal for half-bridge A
PWM_B	6	8	I	Input signal for half-bridge B
PWM_C	14	16	I	Input signal for half-bridge C
PWM_D	16	18	I	Input signal for half-bridge D
$\overline{\text{RESET\_AB}}$	5	7	I	Reset signal for half-bridge A and half-bridge B, active-low
$\overline{\text{RESET\_CD}}$	15	17	I	Reset signal for half-bridge C and half-bridge D, active-low
$\overline{\text{SD}}$	3	5	O	Shutdown signal, open-drain, active-low
VDD	17	21	P	Power supply for digital voltage regulator requires 0.1-μF capacitor to GND.
VREG	10	12	P	Digital regulator supply filter pin requires 0.1-μF capacitor to AGND.

(1) I = input, O = output, P = power

TAS5142 Block Diagram

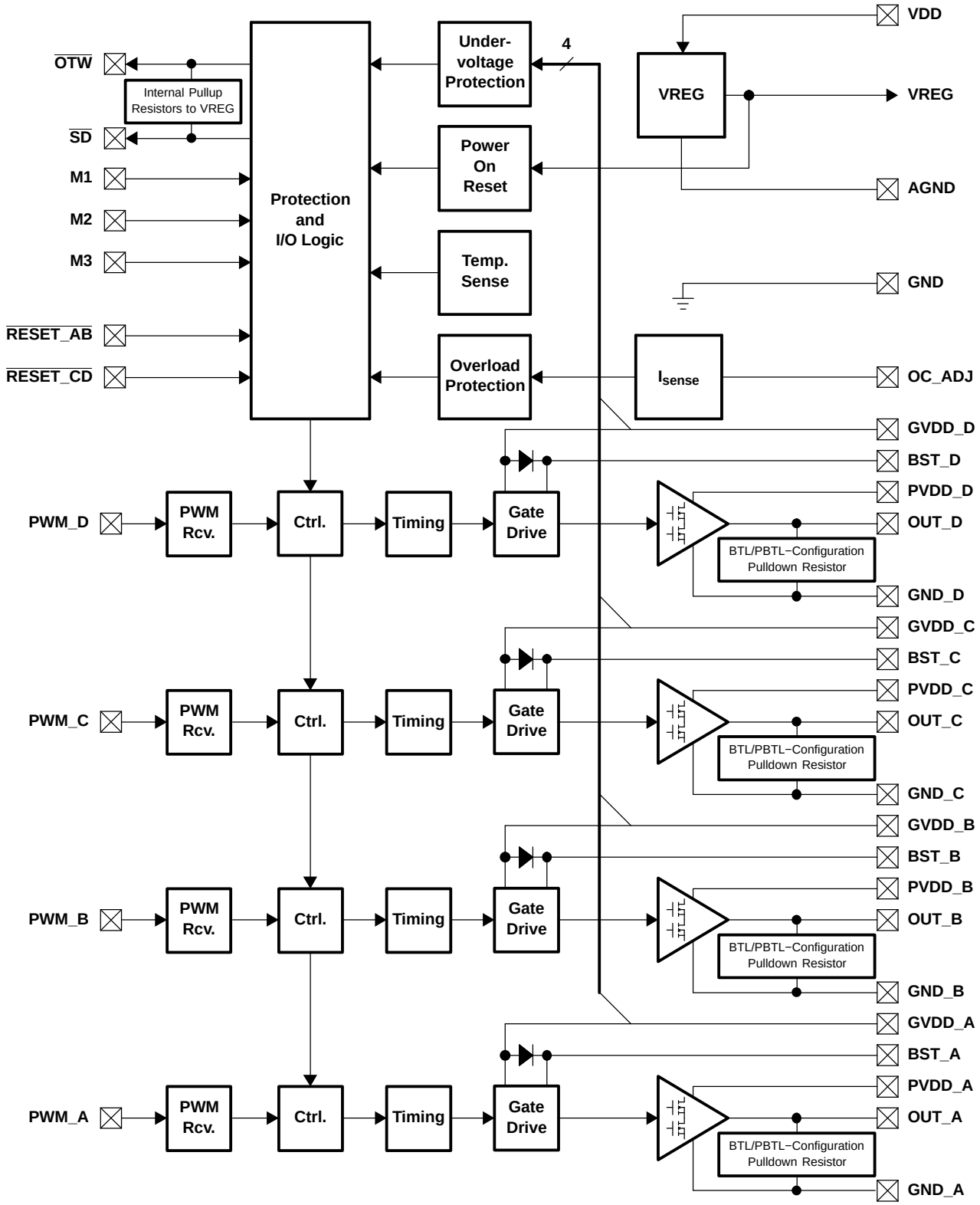

TAS5508 (MAIN : IC51)

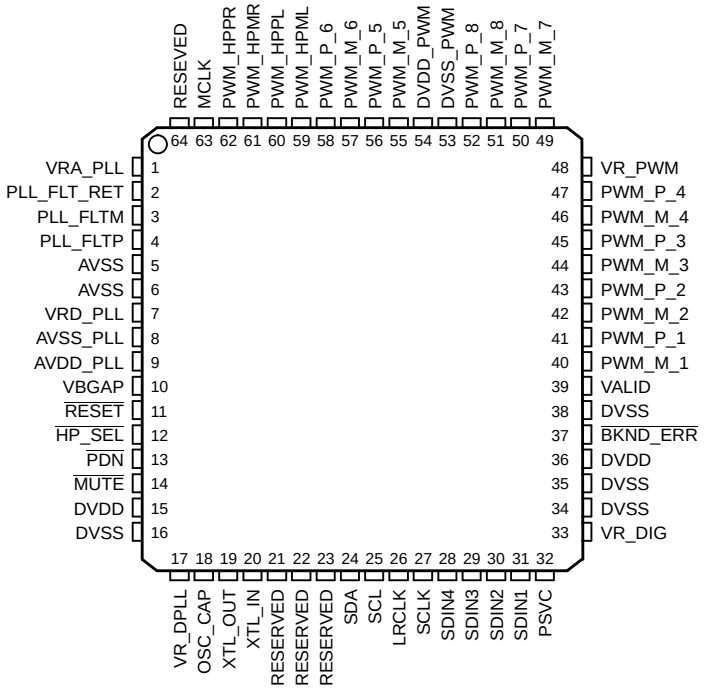

P0010-01

TAS5508 Pin Discriptions

TERMINAL		TYPE(1)	5-V TOLERANT	TERMINATION(2)	DESCRIPTION
NAME	NO.				
AVDD_PLL	9	P			3.3-V analog power supply for PLL. This terminal can be connected to the same power source used to drive power terminal DVDD, but to achieve low PLL jitter, this terminal should be bypassed to AVSS_PLL with a 0.1-µF low-ESR capacitor.
AVSS	5, 6	P			Analog ground
AVSS_PLL	8	P			Analog ground for PLL. This terminal should reference the same ground as terminal DVSS, but to achieve low PLL jitter, ground noise at this terminal must be minimized. The availability of the AVSS terminal allows a designer to use optimizing techniques such as star ground connections, separate ground planes, or other quiet ground-distribution techniques to achieve a quiet ground reference at this terminal.
$\overline{\text{BKND\_ERR}}$	37	DI		Pullup	Active-low. A back-end error sequence is generated by applying logic low to this terminal. The $\overline{\text{BKND\_ERR}}$ results in no change to any system parameters, with all H-bridge drive signals going to a hard-mute (M) state.
DVDD	15, 36	P			3.3-V digital power supply
DVDD_PWM	54	P			3.3-V digital power supply for PWM
DVSS	16, 34, 35, 38	P			Digital ground
DVSS_PWM	53	P			Digital ground for PWM
$\overline{\text{HP\_SEL}}$	12	DI	5 V	Pullup	Headphone in/out selector. When a logic low is applied, the headphone is selected (speakers are off). When a logic high is applied, speakers are selected (headphone is off).
LRCLK	26	DI	5 V		Serial-audio data left/right clock (sampling-rate clock)
MCLK	63	DI	5 V	Pulldown	MCLK is a 3.3-V master clock input. The input frequency of this clock can range from 4 MHz to 50 MHz.
$\overline{\text{MUTE}}$	14	DI	5 V	Pullup	Soft mute of outputs, active-low (muted signal = a logic low, normal operation = a logic high). The mute control provides a noiseless volume ramp to silence. Releasing mute provides a noiseless ramp to previous volume.
OSC_CAP	18	AO			Oscillator capacitor
$\overline{\text{PDN}}$	13	DI	5 V	Pullup	Power down, active-low. $\overline{\text{PDN}}$ powers down all logic and stops all clocks whenever a logic low is applied. The internal parameters are preserved through a power-down cycle, as long as $\overline{\text{RESET}}$ is not active. The duration for system recovery from power down is 100 ms.
PLL_FLT_RET	2	AO			PLL external filter return
PLL_FLTM	3	AO			PLL negative input. Connected to PLL_FLT_RTN via an RC network
PLL_FLTP	4	AI			PLL positive input. Connected to PLL_FLT_RTN via an RC network
PSVC	32	O			Power-supply volume control PWM output
PWM_HPML	59	DO			PWM left-channel headphone (differential –)
PWM_HPMR	61	DO			PWM right-channel headphone (differential –)
PWM_HPPL	60	DO			PWM left-channel headphone (differential +)
PWM_HPPR	62	DO			PWM right-channel headphone (differential +)
PWM_M_1	40	DO			PWM 1 output (differential –)
PWM_M_2	42	DO			PWM 2 output (differential –)
PWM_M_3	44	DO			PWM 3 output (differential –)
PWM_M_4	46	DO			PWM 4 output (differential –)
PWM_M_5	55	DO			PWM 5 output (differential –)
PWM_M_6	57	DO			PWM 6 output (differential –)
PWM_M_7	49	DO			PWM 7 (lineout L) output (differential –)
PWM_M_8	51	DO			PWM 8 (lineout R) output (differential –)
PWM_P_1	41	DO			PWM 1 output (differential +)
PWM_P_2	43	DO			PWM 2 output (differential +)

(1) Type: A = analog; D = 3.3-V digital; P = power/ground/decoupling; I = input; O = output
(2) All pullups are 200-mA weak pullups and all pulldowns are 200-mA weak pulldowns. The pullups and pulldowns are included to ensure proper input logic levels if the terminals are left unconnected (pullups => logic-1 input; pulldowns => logic-0 input). Devices that drive inputs with pullups must be able to sink 200 mA, while maintaining a logic-0 drive level. Devices that drive inputs with pulldowns must be able to source 200 mA, while maintaining a logic-1 drive level.

TERMINAL		TYPE(1)	5-V TOLERANT	TERMINATION(2)	DESCRIPTION
NAME	NO.				
PWM_P_3	45	DO			PWM 3 output (differential +)
PWM_P_4	47	DO			PWM 4 output (differential +)
PWM_P_5	56	DO			PWM 5 output (differential +)
PWM_P_6	58	DO			PWM 6 output (differential +)
PWM_P_7	50	DO			PWM 7 (lineout L) output (differential +)
PWM_P_8	52	DO			PWM 8 (lineout R) output (differential +)
RESERVED	21, 22, 23, 64				Connect to digital ground
$\overline{\text{RESET}}$	11	DI	5 V	Pullup	System reset input, active-low. A system reset is generated by applying a logic low to this terminal. $\overline{\text{RESET}}$ is an asynchronous control signal that restores the TAS5508 to its default conditions, sets the valid output low, and places the PWM in the hard mute (M) state. Master volume is immediately set to full attenuation. On the release of $\overline{\text{RESET}}$, if $\overline{\text{PDN}}$ is high, the system performs a 4- to 5-ms device initialization and sets the volume at mute.
SCL	25	DI	5 V		I^2C serial-control clock input/output
SCLK	27	DI	5 V		Serial-audio data clock (shift clock) input
SDA	24	DIO	5 V		I^2C serial-control data-interface input/output
SDIN1	31	DI	5 V	Pulldown	Serial-audio data input 1 is one of the serial-data input ports. SDIN1 supports four discrete (stereo) data formats and is capable of inputting data at 64 Fs.
SDIN2	30	DI	5 V	Pulldown	Serial-audio data input 2 is one of the serial-data input ports. SDIN2 supports four discrete (stereo) data formats and is capable of inputting data at 64 Fs.
SDIN3	29	DI	5 V	Pulldown	Serial-audio data input 3 is one of the serial-data input ports. SDIN3 supports four discrete (stereo) data formats and is capable of inputting data at 64 Fs.
SDIN4	28	DI	5 V	Pulldown	Serial-audio data input 4 is one of the serial-data input ports. SDIN4 supports four discrete (stereo) data formats and is capable of inputting data at 64 Fs.
VALID	39	DO			Output indicating validity of PWM outputs, active-high
VBGAP	10	P			Band-gap voltage reference. A pinout of the internally regulated 1.2-V reference. Typically has a 1-nF low-ESR capacitor between VBGAP and AVSS_PLL. This terminal must not be used to power external devices.
VR_DIG	33	P			Voltage reference for 1.8-V digital core supply. A pinout of the internally regulated 1.8-V power used by digital core logic. A 4.7-µF low-ESR capacitor(3) should be connected between this terminal and DVSS. This terminal must not be used to power external devices.
VR_DPLL	17	P			Voltage reference for 1.8-V digital PLL supply. A pinout of the internally regulated 1.8-V power used by digital PLL logic. A 0.1-µF low-ESR capacitor(3) should be connected between this terminal and DVSS_CORE. This terminal must not be used to power external devices.
VR_PWM	48	P			Voltage reference for 1.8-V digital PWM core supply. A pinout of the internally regulated 1.8-V power used by digital PWM core logic. A 0.1-µF low-ESR capacitor(3) should be connected between this terminal and DVSS_PWM. This terminal must not be used to power external devices.
VRA_PLL	1	P			Voltage reference for 1.8-V PLL analog supply. A pinout of the internally regulated 1.8-V power used by PLL logic. A 0.1-µF low-ESR capacitor(3) should be connected between this terminal and AVSS_PLL. This terminal must not be used to power external devices.
VRD_PLL	7	P			Voltage reference for 1.8-V PLL digital supply. A pinout of the internally regulated 1.8-V power used by PLL logic. A 0.1-µF low-ESR capacitor(3) should be connected between this terminal and AVSS_PLL. This terminal must not be used to power external devices.
XTL_IN	20	AI			XTL_OUT and XTL_IN are the only LVCMOS terminals on the device. They provide a reference clock for the TAS5508 via use of an external fundamental-mode crystal. XTL_IN is the 1.8-V input port for the oscillator circuit. A 13.5-MHz crystal (HCM49) is recommended.
XTL_OUT	19	AO			XTL_OUT and XTL_IN are the only LVCMOS terminals on the device. They provide a reference clock for the TAS5508 via use of an external fundamental-mode crystal. XTL_OUT is the 1.8-V output drive to the crystal. A 13.5-MHz crystal (HCM49) is recommended.

(3) If desired, low-ESR capacitance values can be implemented by paralleling two or more ceramic capacitors of equal value. Paralleling capacitors of equal value provides an extended high-frequency supply decoupling. This approach avoids the potential of producing parallel resonance circuits that have been observed when paralleling capacitors of different values.

TAS5508 Block Diagram

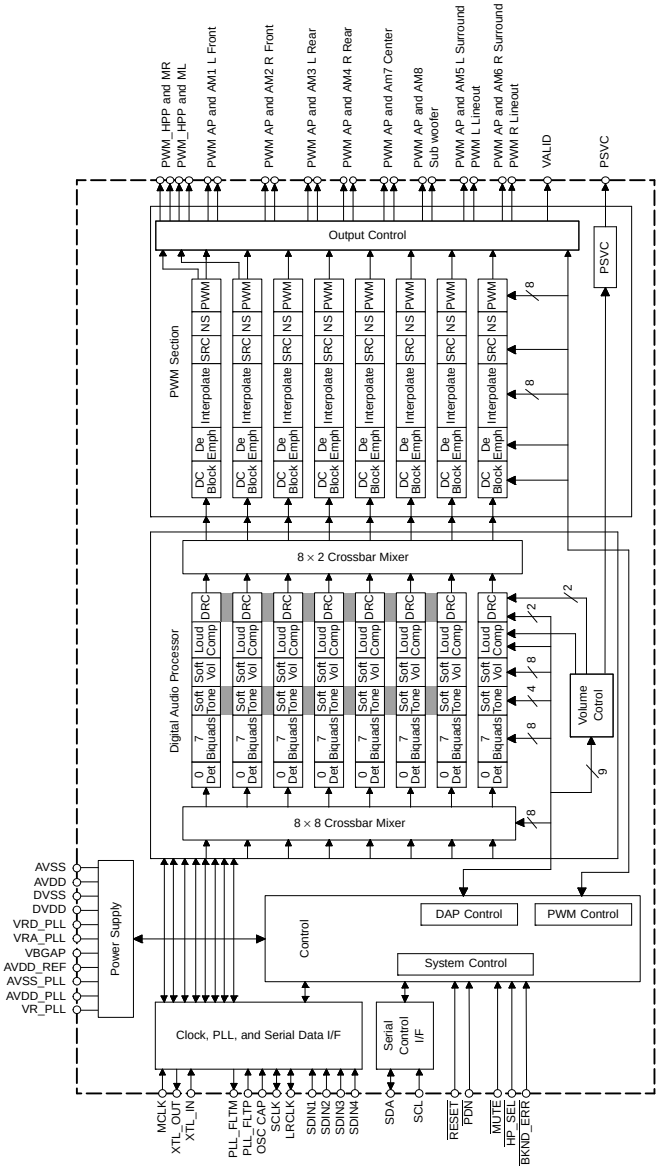

ICE3B0365J (SMPS : IC91)

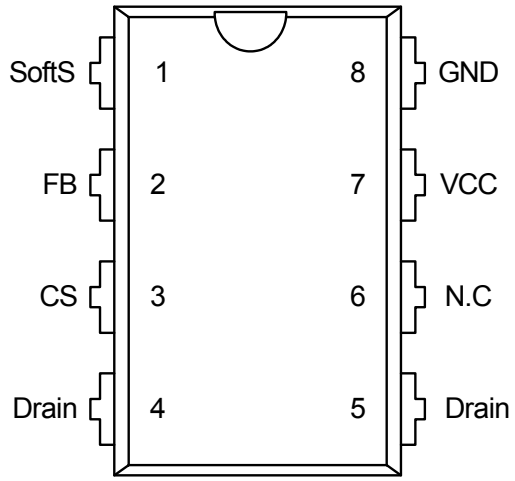

Pin	Symbol	Function
1	SoftS	Soft-Start
2	FB	Feedback
3	CS	Current Sense/ 650V[1] Depl. CoolMOS™ Source
4	Drain	650V[1] Depl. CoolMOS™ Drain
5	Drain	650V[1] Depl. CoolMOS™ Drain
6	N.C.	Not Connected
7	VCC	Controller Supply Voltage
8	GND	Controller Ground

[1] at T_j = 110°C

ICE3B0365J Block Diagram

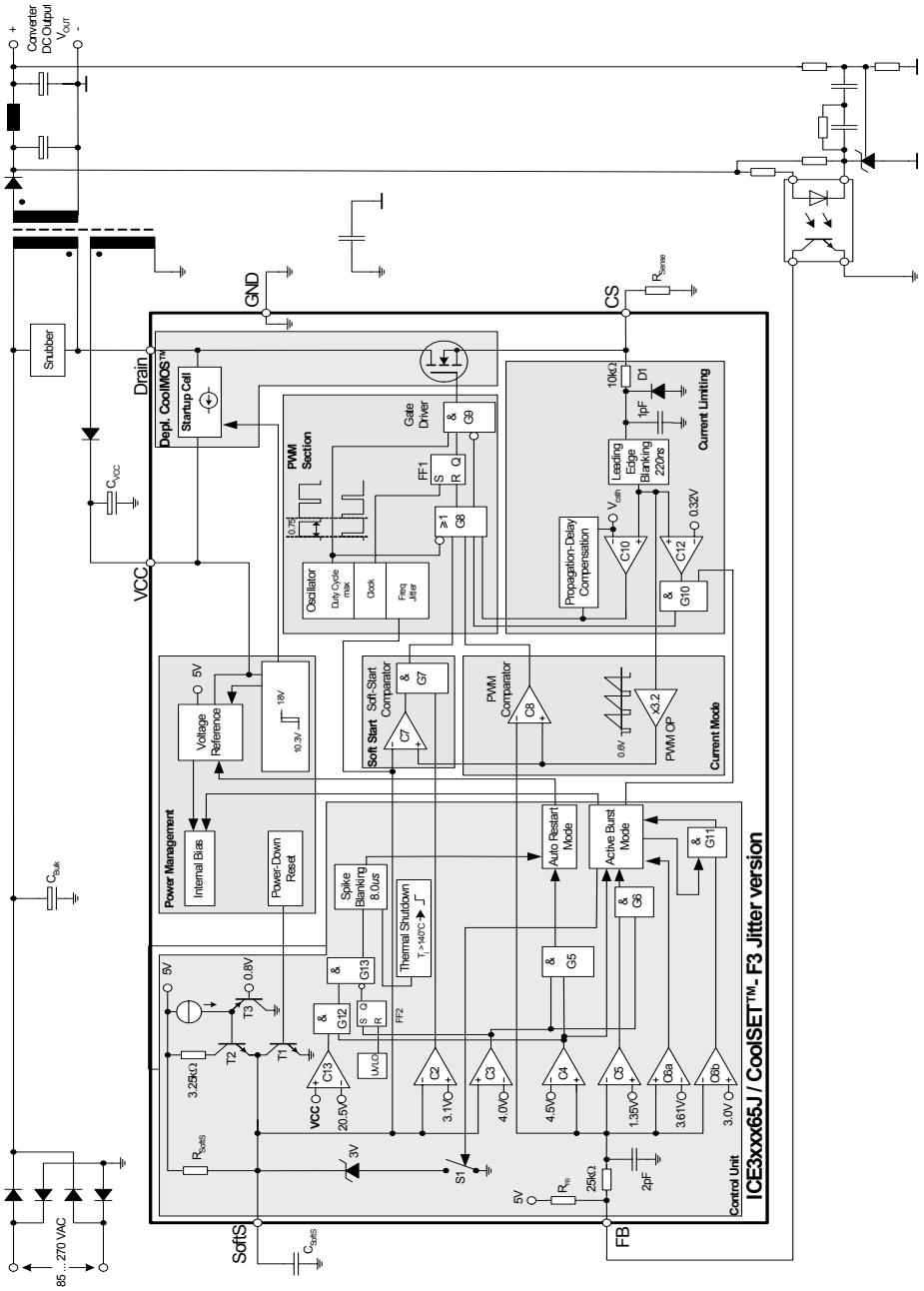

ICE2B265 (SMPS : IC92)

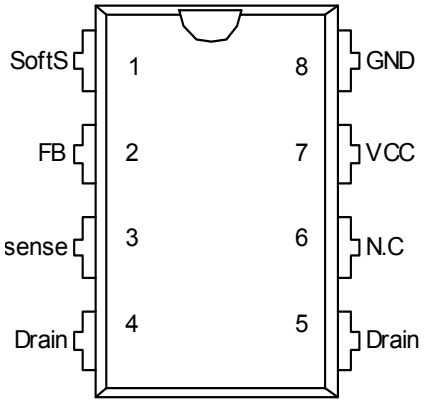

Pin	Symbol	Function
1	SoftS	Soft-Start
2	FB	Feedback
3	Isense	Controller Current Sense Input, CoolMOS™ Source Output
4	Drain	650V[1]/800V[2] CoolMOS™ Drain
5	Drain	650V[1]/800V[2] CoolMOS™ Drain
6	N.C	Not connected
7	VCC	Controller Supply Voltage
8	GND	Controller Ground

[1] at T_j = 110°C

[2] at T_j = 25°C

ICE2B265 Block Diagram

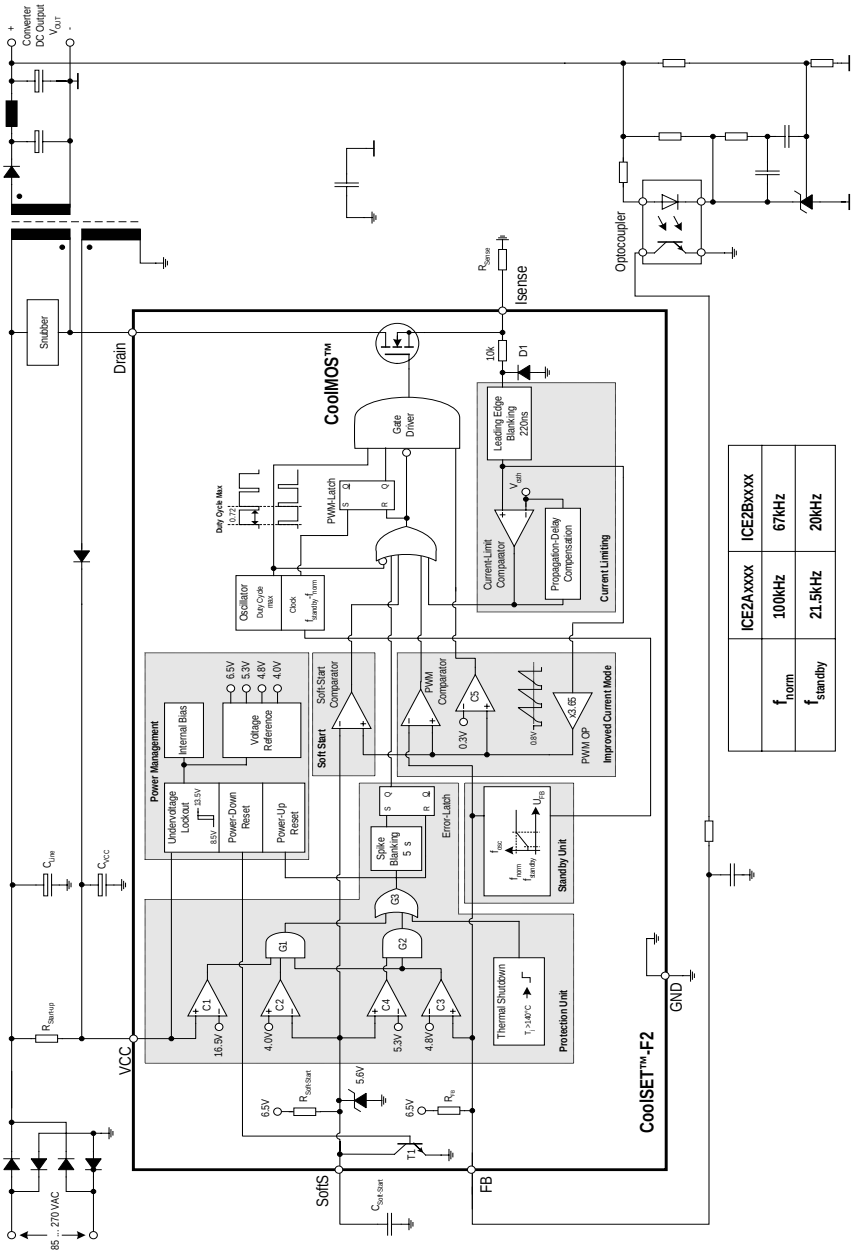

ICE2QS01 (SMPS : IC93)

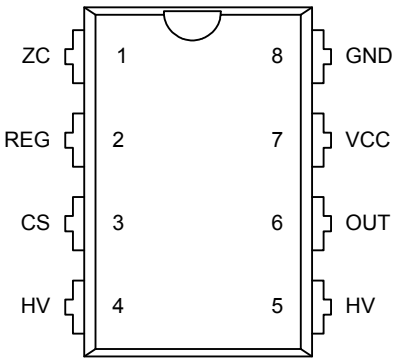

Pin	Symbol	Function
1	ZC	**Z**ero **C**rossing
2	REG	**Reg**ulation
3	CS	Primary **C**urrent **S**ensing
4, 5	HV	**H**igh **V**oltage input
6	OUT	gate driver **out**put
7	VCC	IC supply voltage
8	GND	Common ground

ICE2QS01 Block Diagram

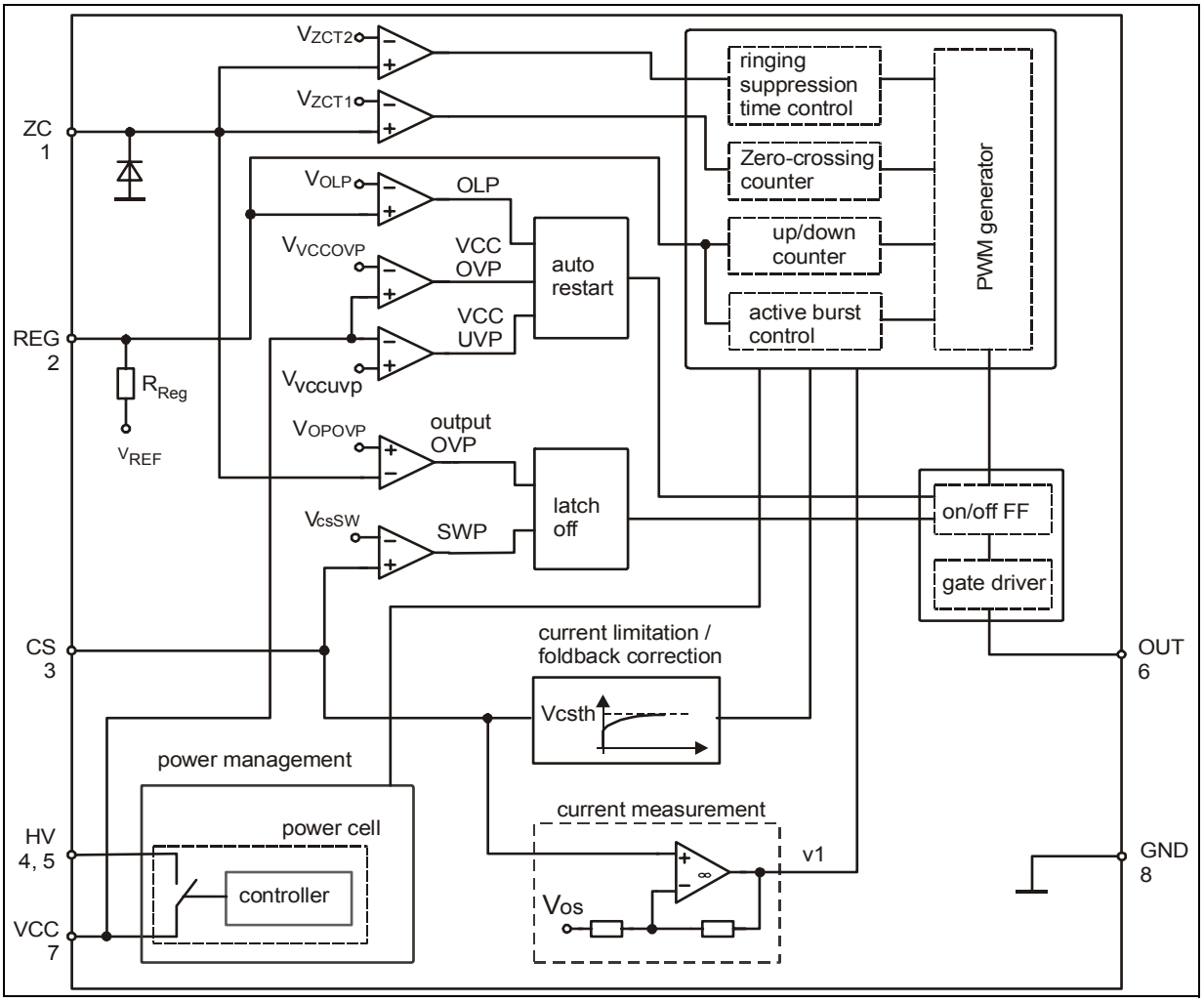

2. DISPLAY

MXS4003A (DISPLAY : CN84)

端子番号 Pin No.	端子名 Pin Name	入出力 IO	機能 Functions
1	VSS	P	グランド GND
2	NC	-	
3	VCC	P	ドライバー系陽極電源 Power supply for Anode Driver
4	VCOMH	O	ドライバー系陰極電源 Power supply for Cathode Driver
5	VLSS	P	アナロググランド Analog system ground
6	D7	I	データバス Data Bus
7	D6	I	データバス Data Bus
8	D5	I	データバス Data Bus
9	D4	I	データバス Data Bus
10	D3	I	データバス Data Bus
11	D2	I	データバス Data Bus
12	D1 (SDIN)	I	データバス、またはシリアルデータ入力 Data Bus or Serial Date Input
13	D0 (SCLK)	I	データバス、またはシリアルクロック入力 Data Bus or Serial Clock Input
14	E, RD#	I	読み出し（シリアルインターフェース時、内部で″L″固定になる） Read (This pin stays "L"(low) in Serial Interface Mode)
15	R/W#, WR#	I	書き込み（シリアルインターフェース時、内部で″L″固定になる） Write (This pin stays "L"(low) in Serial Interface Mode)
16	BS0	I	インターフェース選択子 Select MCU bus interface setting ・BS0=0, BS1=0 : 4 line SPI ・BS0=0, BS1=1 : 8bit 8080 Parallel ・BS0=1, BS1=0 : 3 line SPI ・BS0=1, BS1=1 : 8bit 6800 Parallel
17	BS1	I	
18	D/C#	I	データ/コマンド切替制御 ″H″:データ, ″L″:コマンド Data/Command Control. "H" : Data, "L" : Command
19	CS#	I	チップセレクト ″L″でI/F通信可能 Chip Select, Active "L"
20	RES#	I	リセット ″L″でリセット Reset, Active "L"
21	Reserved	O	NCとしてください Please No Connect.
22	IREF	O	陽極出力基準電流設定端子 Reference current setting
23	NC	-	
24	VDDIO	P	インターフェイス系電源 Power supply for Interface logic level
25	VDD	O	内部ロジック系電源 Power supply for Core logic operation
26	VCI	P	外部ロジック系電源 Low voltage power supply
27	VSL	P	陽極基準電位 Segment Reference voltage
28	VLSS	P	アナロググランド Analog system ground
29	NC	-	
30	VCC	P	ドライバー系陽極電源 Power supply for Anode Driver

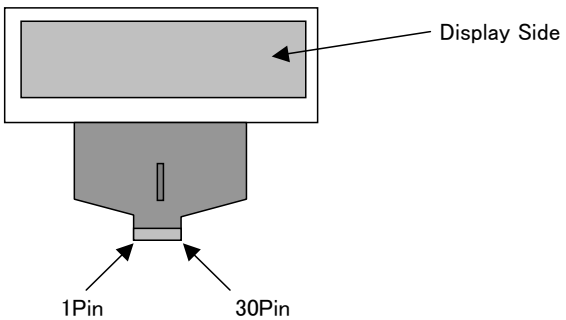

PARTS LIST OF P.C.B. UNIT

∗Parts for which "nsp" is indicated on this table cannot be supplied.

∗The parts listed below are for maintenance only, might differ from the parts used in the unit in appearances or dimensions.

Note: The symbols in the column "Remarks" indicate the following destinations.

E3 : U.S.A. & Canada model E2 : Europe model

DISPLAY PCB ASSY

	Ref. No.	Part No.	Part Name	Remarks		Q'ty	New
SEMICONDUCTORS GROUP							
	IC81	8R2431005500S	MCU, IC (R32C/100, 144P6Q-A)				
	IC83	943231011200S	2A Low Drop Regulator (HRP-5)		CVIBA00DD0WHFP		
	Q932	90M-HX800010R	T.R , CHIP , SOT-23		HVTKRC102S		
	Q933	90M-HX600010R	T.R , CHIP , SOT-23		HVTKRA102S		
	Q934	90M-HX800010R	T.R , CHIP , SOT-23		HVTKRC102S		
	Q935	90M-HX600010R	T.R , CHIP , SOT-23		HVTKRA102S		
	Q936	00D2757001907	MOSFET (P-CH, 2.5V POWER TRENCH)		CVTFDC608PZ		
	Q937	90M-HX800010R	T.R , CHIP , SOT-23		HVTKRC102S		
	D903	00D2760794900	DIODE , CHIP		CVDKDS160RTKP		
	D933,934	00D2760794900	DIODE , CHIP		CVDKDS160RTKP		
	D941	nsp	DIODE , ZENER(CHIP,2.7V)		HVDUDZS2.7BSR		
	D944,945	00D2760794900	DIODE , CHIP		CVDKDS160RTKP		
	D946	90M-HI101090R	L.E.D , 2COLOR(RED/GREEN)		HVDSPR39MVW3		
CAPACITORS GROUP							
	C801	nsp	CAP, CHIP (4.7uF/6.3V, 1608, MURATA GRM18)		CCUS0J475KC		
	C802	nsp	CAP , CHIP (1608, 50V/1000pF)		CCUS1H102KC		
	C805	nsp	CAP , CHIP (1608, 50V/1000pF)		CCUS1H102KC		
	C806	nsp	CAP , CHIP (1608, 50V/0.1uF)		CCUS1H104KC		
	C808,809	nsp	CAP , CHIP (1608, 10V/4.7uF)		CCUS1A475KC		
	C810-815	nsp	CAP , CHIP (1608, 50V/0.1uF)		CCUS1H104KC		
	C816	nsp	CAP , CHIP (1608, 50V/33pF)		CCUS1H330JA		
	C817	nsp	CAP , CHIP (1608, 50V/0.1uF)		CCUS1H104KC		
	C818	nsp	CAP , CHIP (1608, 50V/0.01uF)		CCUS1H103KC		
	C819	nsp	CAP , CHIP (1608, 50V/1000pF)		CCUS1H102KC		
	C823	nsp	CAP , CHIP (1608, 50V/0.1uF)		CCUS1H104KC		
	C824	nsp	CAP , CHIP (1608, 50V/0.01uF)		CCUS1H103KC		
	C825	nsp	CAP , CHIP (1608, 50V/1000pF)		CCUS1H102KC		
	C826	nsp	CAP , CHIP (1608, 50V/33pF)		CCUS1H330JA		
	C827	nsp	CAP, CHIP 1UF/25V/2012/Y5V		CCUC1E105ZF		
	C828,829	nsp	CAP , CHIP (1608, 10V/1uF)		CCUS1A105KC		
	C830	nsp	CAP , CHIP (1608, 50V/1000pF)		CCUS1H102KC		
	C831,832	nsp	CAP , CHIP (25V/4.7uF, 2125 SIZE)		CCUC1E475KC		
	C833	nsp	CAP , ELECT		CCEA1HKS100T		
	C834	nsp	CAP , CHIP (1608, 50V/0.1uF)		CCUS1H104KC		
	C835	nsp	CAP , CHIP (1608, 50V/0.01uF)		CCUS1H103KC		
	C836,837	nsp	CAP , CHIP (1608, 50V/0.1uF)		CCUS1H104KC		
	C838	nsp	CAP , CHIP (1608, 50V/1000pF)		CCUS1H102KC		
	C839	nsp	CAP , CHIP (1608, 50V/0.1uF)		CCUS1H104KC		
	C840	nsp	CAP , ELECT		CCEA1VKS470T		
	C841	nsp	CAP , CHIP (1608, 50V/0.01uF)		CCUS1H103KC		
	C842	nsp	CAP , ELECT (47uF/50V)		CCEA1HKS470T		
	C843	nsp	CAP , CHIP (1608, 50V/0.1uF)		CCUS1H104KC		
	C844	nsp	CAP , CHIP (1608, 50V/0.01uF)		CCUS1H103KC		
	C845	nsp	CAP , CHIP (1608, 50V/1000pF)		CCUS1H102KC		
	C847	nsp	CAP, CHIP (1uF/25V, 2012, MURATA GRM21)		CCUMUC1H105KC		
	C850-855	nsp	RES , CHIP(0 OHM , 5% , 1608)		CRJ10DJ0R0T		
	C856	nsp	CAP , CHIP (1608, 50V/0.01uF)		CCUS1H103KC		
	C857,858	nsp	CAP , CHIP (1608, 50V/0.1uF)		CCUS1H104KC		
	C859	nsp	CAP , CHIP (1608, 50V/0.01uF)		CCUS1H103KC		
	C860	nsp	CAP , CHIP (1608, 50V/1000pF)		CCUS1H102KC		
	C861	nsp	CAP , CHIP ELECT		HCEC1CRV2100T		
	C869	nsp	CAP , CHIP (1608, 50V/0.1uF)		CCUS1H104KC		
	C870	nsp	CAP , CHIP (1608, 50V/0.01uF)		CCUS1H103KC		
	C871	nsp	CAP , CHIP (1608, 50V/1000pF)		CCUS1H102KC		
	C931	nsp	CAP , CHIP (1608, 50V/0.1uF)		CCUS1H104KC		
	C932	nsp	CAP , ELECT		CCEA1CKS470T		

NOTE :
When update Firmware, please confirm a last version in SDI. Use the service board after updating it.

	Ref. No.	Part No.	Part Name	Remarks		Q'ty	New
	C933,934	nsp	CAP , CHIP (1608, 50V/0.1uF)		CCUS1H104KC		
	C941	nsp	CAP , CHIP (1608, 50V/0.1uF)		CCUS1H104KC		
	C944	nsp	CAP , CHIP (1608, 50V/0.1uF)		CCUS1H104KC		
	C946	nsp	CAP , CHIP (1608, 50V/0.1uF)		CCUS1H104KC		
	C949	nsp	CAP , CHIP (1608, 50V/0.1uF)		CCUS1H104KC		
	C950,951	nsp	CAP , CHIP (1608, 50V/1000pF)		CCUS1H102KC		
	C952,953	nsp	CAP , CHIP (1608, 50V/180pF)		CCUS1H181JA		
	C955,956	nsp	CAP , CHIP (1608, 50V/0.1uF)		CCUS1H104KC		
	C957	nsp	CAP , CHIP (1608, 50V/0.01uF)		CCUS1H103KC		
	C958	nsp	CAP , CHIP (1608, 50V/0.1uF)		CCUS1H104KC		
	C959	nsp	CAP , ELECT		CCEA1AKS221T		
	C964	nsp	CAP , CHIP (1608, 50V/0.1uF)		CCUS1H104KC		
	C965	nsp	CAP , CHIP (1608, 50V/0.01uF)		CCUS1H103KC		
	C966	nsp	CAP , CHIP (1608, 50V/1000pF)		CCUS1H102KC		
	C967	nsp	CAP , CHIP (1608, 50V/0.1uF)		CCUS1H104KC		
	C968,969	nsp	CAP , CHIP (1608, 50V/2700pF)		CCUS1H272KC		
	C970	nsp	CAP , CHIP (1608, 50V/0.1uF)		CCUS1H104KC		
	C971	nsp	CAP , CHIP (1608, 50V/0.01uF)		CCUS1H103KC		
	C972	nsp	CAP , CHIP (1608, 50V/1000pF)		CCUS1H102KC		
	C973	nsp	CAP , CHIP (1608, 50V/0.1uF)		CCUS1H104KC		
	C974	nsp	CAP , CHIP (1608, 50V/0.01uF)		CCUS1H103KC		
	C975	nsp	CAP , CHIP (1608, 50V/1000pF)		CCUS1H102KC		
	C976	nsp	CAP , CHIP (1608, 50V/0.1uF)		CCUS1H104KC		
	C977	nsp	CAP , CHIP (1608, 50V/0.01uF)		CCUS1H103KC		
	C978,979	nsp	CAP , CHIP (1608, 50V/1000pF)		CCUS1H102KC		
	C980	nsp	CAP , CHIP (1608, 50V/0.1uF)		CCUS1H104KC		
	C982	nsp	CAP , CHIP (1608, 50V/0.1uF)		CCUS1H104KC		
	C983	nsp	CAP , CHIP (1608, 50V/1000pF)		CCUS1H102KC		
	C985	nsp	CAP , CHIP (1608, 50V/0.1uF)		CCUS1H104KC		
	C988,989	nsp	CAP , CHIP (1608, 50V/0.1uF)		CCUS1H104KC		
	C991	nsp	CAP , CHIP (1608, 50V/0.1uF)		CCUS1H104KC		
	C992,993	nsp	CAP , CHIP (1608, 50V/1000pF)		CCUS1H102KC		
	C994	nsp	CAP , CHIP (1608, 50V/0.1uF)		CCUS1H104KC		
	C995	nsp	CAP , CHIP (1608, 50V/1000pF)		CCUS1H102KC		
	C996	nsp	CAP , CHIP (1608, 50V/0.1uF)		CCUS1H104KC		
OTHER PATRS GROUP							
	BK81-84	nsp	BRACKET , PCB		CMD1A569		
	BN81	nsp	WIRE ASS'Y (SHIELD, 7P, 2MM, 250MM)		CWB1C90725047001		
	BN82	nsp	WIRE ASS'Y (SHIELD, 5P, 2MM, 250MM)		CWB1C905250NG002		
	BN83	nsp	WIRE ASS'Y (SHIELD, 6P, 2MM, 120MM)		CWB1C906120NG001		
	CN84	nsp	WAFER, SMD (30P, 0.5mm, FRONT FLIP)		CJP30GB278ZY		
	CN88	nsp	WAFER, STRSIGHT, 1MM, SMD		CJP30GA193ZY		
	JK81	943643001320S	JACK , USB STRAIGHT(BLACK)		CJJ9X006Z		
	JK82	nsp	JACK , IPOD CONNECTOR (37P, DENON)		CJJ00D051451004-DM		
	JK83,84	00D9430105204	JACK , HEADPHONE (SILVER)		HJJ2D003Y		
	L801,802	nsp	BEAD , FERRITE (FCM2012KF-121T08 , 120 OHM)		CLZ9R010Z		
	L904-907	nsp	CHIP , BEAD		HLZ9Z014Z		
	L931	nsp	FERRITE , CHIP BEAD(220ohm, 2012)		CLZ9R006Z		
	L932,933	nsp	RES , CHIP , 0 OHM, 5% , 1/8W , 2012		CRJ18AJ0R0T		
	RC81	00D9430194706	SENSOR , REMOCON		CRVKSM603TH5B		
	S901-904	90M-SP001210R	SW , TACT		CST1A012ZT		
	S906-909	90M-SP001210R	SW , TACT		CST1A012ZT		
	S911,912	90M-SP001210R	SW , TACT		CST1A012ZT		
	X802	943142011280S	16M Resonator		COXCSTCE16M0V51		
		943606011480S	CABLE , CARD(1.0MM, 30P, 180MM, B TYPE)	CN88	CWC4F4A30A180B08		

MAIN PCB ASS'Y

	Ref. No.	Part No.	Part Name	Remarks		Q'ty	New
SEMICONDUCTORS GROUP							
	IC11	8R2431005400S	MCU, IC (R32C/100, 144P6Q-A)		CVIR5F64169DFD		
	IC12	943231011000S	I,C , REGULATOR(3.3V SMD Type)		BVIBA33BC0FP		
	IC13	943231011210S	I.C , REGULATOR (SWITCH LOW DROP,5V,DPAK-5)		CVIKIA78R050F		
	IC18	90M-HC900160R	I.C , REGULATOR(SOT-223)		CVIKIA1117S15		
	IC21	943245006980S	I.C , CD DSP (SERVO,AMPLIFIER,DSP,LQFP-80P)		CVITC94A92FG		
	IC22	943249011290S	I.C EEPROM(256K, 32-kword x 8 bit)		CVIR1EX24256ASAS0A		
	IC25	943239011300S	Reset IC (3V, SSOP5)		CVIBD4730G		
	IC26	943231011220S	I.C , REGULATOR (9V, DPAK-5)		CVIKIA78R09F		
	IC31	943239006900S	I.C , 5-CH MOTOR DRIVE IC (WITH REG,SSOP-28P)		CVIIP4001CRLTF		
	IC32	943231011210S	I.C , REGULATOR (SWITCH LOW DROP,5V,DPAK-5)		CVIKIA78R050F		
	IC41	00D2623762008	I.C , AUDIO CODEC(64PIN_LQFP, 0.5MM)		CVIAK4683EQ		
	IC42,43	00MHC008005K0	I.C , INVERTER(CMOS)		CVITC7WHU04FU		
	IC44	00MHC10102090	I.C , OP AMP (JRC)		HVINJM2068MDTE1		
	IC51	00MHC12273370	I.C , PWM PROCESSOR		CVITAS5508BPAG		
	IC52	00MHC10102090	I.C , OP AMP (JRC)		HVINJM2068MDTE1		
	IC53	00MHC10200090	I.C , HEADPHONE (JRC)		HVINJM4556AL		
	IC71,72	00D2623503911	I.C , STEREO DIGITAL AMP		CVITAS5142DKDG4		
	Q201	90M-HX600020R	T.R , CHIP		HVTKTA1504SYRTK		
	Q235,236	90M-HX800010R	T.R , CHIP , SOT-23		HVTKRC102S		
	Q237	90M-BA001600R	T.R , CHIP , SOT-23		HVTKRA107S		
	Q238	90M-HX800080R	T.R , CHIP , SOT-23		HVTKRC107S		
	Q239	90M-HX800010R	T.R , CHIP , SOT-23		HVTKRC102S		
	Q251,252	90M-HX800010R	T.R , CHIP , SOT-23		HVTKRC102S		
	Q256	90M-HX800010R	T.R , CHIP , SOT-23		HVTKRC102S		
	Q301	90M-HX800100R	T.R , CHIP		HVTKTC3875SYRTK		
	Q303	90M-HX800010R	T.R , CHIP , SOT-23		HVTKRC102S		
	Q404-407	90M-HT300970R	T.R , CHIP		HVTKTC2875B		
	Q501	90M-HX800080R	T.R , CHIP , SOT-23		HVTKRC107S		
	Q502	90M-BA001600R	T.R , CHIP , SOT-23		HVTKRA107S		
	Q503	90M-HX800080R	T.R , CHIP , SOT-23		HVTKRC107S		
	Q504	90M-BA001600R	T.R , CHIP , SOT-23		HVTKRA107S		
	Q608,609	90M-HT800110R	T.R , CHIP		HVTKTC4075GR		
	Q610-615	90M-HT300970R	T.R , CHIP		HVTKTC2875B		
	Q616	90M-HX800010R	T.R , CHIP , SOT-23		HVTKRC102S		
	Q617	90M-HX600010R	T.R , CHIP , SOT-23		HVTKRA102S		
	Q618	90M-HX800010R	T.R , CHIP , SOT-23		HVTKRC102S		
	Q622	90M-HX800010R	T.R , CHIP , SOT-23		HVTKRC102S		
	Q623	90M-HX600010R	T.R , CHIP , SOT-23		HVTKRA102S		
	Q624	90M-HX800010R	T.R , CHIP , SOT-23		HVTKRC102S		
	Q701	90M-HX800080R	T.R , CHIP , SOT-23		HVTKRC107S		
	Q702	90M-BA001600R	T.R , CHIP , SOT-23		HVTKRA107S		
	Q705	90M-HX600020R	T.R , CHIP		HVTKTA1504SYRTK		
	Q706	90M-HX800100R	T.R , CHIP		HVTKTC3875SYRTK		
	Q707	90M-HX600020R	T.R , CHIP		HVTKTA1504SYRTK		
	Q708	90M-HX800100R	T.R , CHIP		HVTKTC3875SYRTK		
	Q751	90M-HX800080R	T.R , CHIP , SOT-23		HVTKRC107S		
	Q752	90M-BA001600R	T.R , CHIP , SOT-23		HVTKRA107S		
	D103	00D2760794900	DIODE , CHIP		CVDKDS160RTKP		
	D201	00MHZ21303210	DIODE , CHIP		HVD1SS355T		
	D202,203	00D2760794900	DIODE , CHIP		CVDKDS160RTKP		
	D207	nsp	DIODE , RECT		CVD1N4003T		
	D208-211	00MHZ21303210	DIODE , CHIP		HVD1SS355T		
	D230	nsp	DIODE , ZENER		HVDMTZJ16BT		
	D231	nsp	DIODE , ZENER		HVDMTZJ11BT		
	D232	nsp	DIODE , ZENER		HVDMTZJ20BT		
	D233	nsp	DIODE , ZENER		HVDMTZJ5.6BT		
	D234	nsp	DIODE , ZENER		HVDMTZJ7.5BT		
	D235	nsp	DIODE , ZENER		HVDMTZJ20BT		
	D238,239	00D2760794900	DIODE , CHIP		CVDKDS160RTKP		

NOTE :
When update Firmware, please confirm a last version in SDI. Use the service board after updating it.

	Ref. No.	Part No.	Part Name	Remarks		Q'ty	New
	D240	nsp	DIODE , ZENER		HVDMTZJ16BT		
	D241	nsp	DIODE , ZENER		HVDMTZJ20BT		
	D251-255	00MHZ21303210	DIODE , CHIP		HVD1SS355T		
	D262,263	00MHZ21303210	DIODE , CHIP		HVD1SS355T		
	D302	00D2760794900	DIODE , CHIP		CVDKDS160RTKP		
	D401	00D2760794900	DIODE , CHIP		CVDKDS160RTKP		
	D501-504	00MHZ21303210	DIODE , CHIP		HVD1SS355T		
	D605-606	00MHZ21303210	DIODE , CHIP		HVD1SS355T		
	D607,608	00D2760794900	DIODE , CHIP		CVDKDS160RTKP		
	D609	00MHZ21303210	DIODE , CHIP		HVD1SS355T		
	D612,613	00D2760794900	DIODE , CHIP		CVDKDS160RTKP		
	D615,616	00D2760794900	DIODE , CHIP		CVDKDS160RTKP		
CAPACITORS GROUP							
	C131	nsp	CAP , CHIP (1608, 50V/0.01uF)		CCUS1H103KC		
	C143	nsp	CAP , ELECT		CCEA1CKS101T		
	C144	nsp	CAP , CHIP (1608, 50V/0.1uF)		CCUS1H104KC		
	C145	nsp	CAP , ELECT		CCEA1CKS101T		
	C146	nsp	CAP , CHIP (1608, 50V/0.1uF)		CCUS1H104KC		
	C174	nsp	CAP , ELECT		CCEA1CKS101T		
	C175	nsp	CAP , CHIP (1608, 50V/0.1uF)		CCUS1H104KC		
	C176	nsp	CAP , CHIP (1608, 50V/1000pF)		CCUS1H102KC		
	C177	nsp	CAP , ELECT		CCEA1CKS101T		
	C178	nsp	CAP , CHIP (1608, 50V/0.1uF)		CCUS1H104KC		
	C180	nsp	CAP , CHIP (1608, 50V/1000pF)		CCUS1H102KC		
	C185	nsp	CAP , ELECT		CCEA1CKS101T		
	C186	nsp	CAP , CHIP (1608, 50V/0.1uF)		CCUS1H104KC		
	C187	nsp	CAP , CHIP (1608, 50V/1000pF)		CCUS1H102KC		
	C188	nsp	CAP , CHIP (1608, 50V/0.1uF)		CCUS1H104KC		
	C189	nsp	CAP , ELECT		CCEA1CKS101T		
	C190	nsp	CAP , CHIP (1608, 50V/0.1uF)		CCUS1H104KC		
	C191	nsp	CAP , CHIP (1608, 50V/1000pF)		CCUS1H102KC		
	C201	nsp	CAP , CHIP (1608, 50V/0.1uF)		CCUS1H104KC		
	C202	nsp	CAP , CHIP (1608, 50V/2200pF)		CCUS1H222KC		
	C203	nsp	CAP , CHIP (1608, 50V/0.01uF)		CCUS1H103KC		
	C204	nsp	CAP , CHIP (1608, 50V/4700pF)		CCUS1H472KC		
	C205	nsp	CAP , CHIP (1608, 50V/0.1uF)		CCUS1H104KC		
	C206	nsp	CAP , CHIP (1608, 50V/0.015uF)		CCUS1H153KC		
	C207	nsp	CAP , CHIP (1608, 50V/0.1uF)		CCUS1H104KC		
	C209	nsp	CAP , CHIP (1608, 50V/0.1uF)		CCUS1H104KC		
	C210	nsp	CAP , CHIP ELECT		HCEC0JRV102T		
	C211	nsp	CAP , CHIP (1608, 50V/0.033uF)		CCUS1H333KC		
	C212	nsp	CAP , CHIP (1608, 50V/5600pF)		CCUS1H562KC		
	C213	nsp	CAP , CHIP (1608, 50V/0.1uF)		CCUS1H104KC		
	C214,215	nsp	CAP , CHIP (1608, 50V/470pF)		CCUS1H471JA		
	C216	nsp	CAP , CHIP ELECT		HCEC0JRV102T		
	C217	nsp	CAP , CHIP (1608, 50V/0.01uF)		CCUS1H103KC		
	C219,220	nsp	CAP , CHIP (1608, 50V/0.047uF)		CCUS1H473KC		
	C221	nsp	CAP , CHIP (1608, 50V/0.1uF)		CCUS1H104KC		
	C224	nsp	CAP , CHIP (1608, 50V/0.1uF)		CCUS1H104KC		
	C225	nsp	CAP , CHIP (1608, 50V/15pF)		CCUS1H150JA		
	C226	nsp	CAP , CHIP (1608, 50V/18pF)		CCUS1H180JA		
	C227	nsp	CAP , CHIP (1608, 50V/0.1uF)		CCUS1H104KC		
	C228	nsp	CAP , ELECT		CCEA1AKS101T		
	C229-231	nsp	CAP , CHIP (1608, 50V/0.1uF)		CCUS1H104KC		
	C232	nsp	CAP , CHIP (1608, 50V/1000pF)		CCUS1H102KC		
	C233	nsp	CAP , CHIP (1608, 50V/0.1uF)		CCUS1H104KC		
	C234,235	nsp	CAP , CHIP (1608, 50V/1000pF)		CCUS1H102KC		
	C237	nsp	CAP , CHIP (1608, 50V/0.1uF)		CCUS1H104KC		
	C238	nsp	CAP , CHIP (1608, 50V/0.015uF)		CCUS1H153KC		
	C239	nsp	CAP , ELECT		CCEA1AKS101T		
	C240	nsp	CAP , CHIP (1608, 50V/0.1uF)		CCUS1H104KC		
	C241	nsp	CAP , CHIP (1608, 50V/47pF)		CCUS1H470JA		
	C242	nsp	CAP , CHIP (1608, 50V/0.1uF)		CCUS1H104KC		
	C243	nsp	CAP , ELECT		CCEA1AKS470T		
	C244	nsp	CAP , CHIP (1608, 50V/0.01uF)		CCUS1H103KC		

	Ref. No.	Part No.	Part Name	Remarks		Q'ty	New
	C245	nsp	CAP , CHIP (1608, 50V/1000pF)		CCUS1H102KC		
	C246	nsp	CAP , CHIP (1608, 50V/0.1uF)		CCUS1H104KC		
	C247,248	nsp	CAP , CHIP(2012 SIZE)		CCUC1A475ZF		
	C251	nsp	CAP , CHIP (1608, 50V/0.1uF)		CCUS1H104KC		
	C252	nsp	CAP , ELECT		CCEA1AKS101T		
	C253	nsp	CAP , ELECT		CCEA1CH471T		
	C254	nsp	CAP , CHIP (1608, 50V/0.1uF)		CCUS1H104KC		
	C255	nsp	CAP , ELECT		CCEA1CH471T		
	C256	nsp	CAP , CHIP (1608, 50V/0.1uF)		CCUS1H104KC		
	C257-259	nsp	RES , CHIP(0 OHM , 5% , 1608)		CRJ10DJ0R0T		
	C260-263	nsp	CAP , CHIP (1608, 50V/0.1uF)		CCUS1H104KC		
	C264,265	nsp	CAP , ELECT		CCEA1CH101T		
	C266	nsp	CAP , CHIP (1608, 50V/0.1uF)		CCUS1H104KC		
	C270	nsp	CAP , CHIP(2012 SIZE)		CCUC1A475ZF		
	C271	nsp	CAP , ELECT		CCEA1HH100T		
	C272	nsp	CAP , CHIP(2012 SIZE)		CCUC1A475ZF		
	C274	nsp	CAP , CHIP (1608, 50V/1000pF)		CCUS1H102KC		
	C275	nsp	CAP , CHIP (1608, 50V/0.01uF)		CCUS1H103KC		
	C276	nsp	CAP , CHIP (1608, 50V/0.1uF)		CCUS1H104KC		
	C278	nsp	CAP , CHIP (1608, 50V/0.1uF)		CCUS1H104KC		
	C279	nsp	CAP , ELECT		CCEA1CH101T		
	C280	nsp	CAP , CHIP (1608, 50V/1000pF)		CCUS1H102KC		
	C285	nsp	CAP , ELECT		CCEA1CH101T		
	C286	nsp	CAP , CHIP (1608, 50V/0.1uF)		CCUS1H104KC		
	C291	nsp	CAP , ELECT		CCEA1CKS101T		
	C292	nsp	CAP , CHIP (1608, 50V/0.1uF)		CCUS1H104KC		
	C293	nsp	CAP , ELECT		CCEA1CKS101T		
	C294	nsp	CAP , CHIP (1608, 50V/0.1uF)		CCUS1H104KC		
	C304	nsp	CAP , CHIP (1608, 50V/0.1uF)		CCUS1H104KC		
	C306	nsp	CAP , CHIP (1608, 50V/0.1uF)		CCUS1H104KC		
	C307	nsp	CAP , ELECT		CCEA1CH471T		
	C308	nsp	CAP , SMD ELECT(MANLEX RV, 16V/470, 10X10)		CCEC1CRV471T		
	C309	nsp	CAP , CHIP (1608, 50V/0.1uF)		CCUS1H104KC		
	C310	nsp	CAP , ELECT		CCEA1AH101T		
	C311	nsp	CAP , CHIP (1608, 50V/0.1uF)		CCUS1H104KC		
	C315	nsp	CAP , CHIP (1608, 50V/1000pF)		CCUS1H102KC		
	C316	nsp	CAP , CHIP (1608, 50V/0.01uF)		CCUS1H103KC		
	C317,318	nsp	CAP , CHIP (1608, 50V/0.1uF)		CCUS1H104KC		
	C319	nsp	CAP , ELECT		CCEA1CH470T		
	C320	nsp	CAP , CHIP (1608, 50V/0.01uF)		CCUS1H103KC		
	C321	nsp	CAP , ELECT		CCEA1CH101T		
	C322	nsp	CAP , CHIP (1608, 50V/0.01uF)		CCUS1H103KC		
	C323	nsp	CAP , ELECT		CCEA1EH101T		
	C331,332	nsp	CAP , CHIP (1608, 50V/1000pF)		CCUS1H102KC		
	C334,335	nsp	CAP , CHIP (1608, 50V/0.1uF)		CCUS1H104KC		
	C350	nsp	CAP , CHIP (1608, 50V/2200pF)		CCUS1H222KC		
	C351	nsp	CAP , ELECT		CCEA1CH470T		
	C352-355	nsp	CAP , CHIP (1608, 50V/0.1uF)		CCUS1H104KC		
	C389	nsp	CAP , CHIP(2012 SIZE)		CCUC1A475ZF		
	C392	nsp	CAP , CHIP (1608, 50V/1000pF)		CCUS1H102KC		
	C401	nsp	CAP , ELECT		CCEA1EH101T		
	C402	nsp	CAP , CHIP (1608, 50V/0.1uF)		CCUS1H104KC		
	C403	00D2544694909	CAP , ELECT(ELNA RFO 100uF/25V)		CCEA1ERFO101T		
	C404	nsp	CAP , CHIP (1608, 50V/0.1uF)		CCUS1H104KC		
	C405	nsp	CAP , CHIP (1608, 50V/47pF)		CCUS1H470JA		
	C406	nsp	CAP , CHIP (1608, 50V/56pF)		CCUS1H560JA		
	C407	nsp	CAP , CHIP (1608, 50V/0.01uF)		CCUS1H103KC		
	C409	nsp	CAP , CHIP (1608, 50V/0.1uF)		CCUS1H104KC		
	C410	nsp	CAP , ELECT		CCEA1HH100T		
	C411	nsp	CAP , ELECT		CCEA1HH1R0T		
	C412	nsp	CAP , CHIP (1608, 50V/0.1uF)		CCUS1H104KC		
	C413	nsp	CAP , ELECT		CCEA1HH2R2T		
	C414	nsp	CAP , CHIP (1608, 50V/0.1uF)		CCUS1H104KC		
	C415	nsp	CAP , ELECT		CCEA1HH100T		
	C416	nsp	CAP , CHIP (1608, 50V/0.1uF)		CCUS1H104KC		
	C417	00D2544583942	CAP , ELEC ELNA ROB 10uF/50V		CCEA1HROB100T		
	C420-423	nsp	CAP , ELECT		CCEA1HH1R0T		

	Ref. No.	Part No.	Part Name	Remarks		Q'ty	New
	C426-429	nsp	CAP , ELECT		CCEA1HH1R0T		
	C430	nsp	CAP , CHIP (1608, 50V/0.1uF)		CCUS1H104KC		
	C431	nsp	CAP , ELECT		CCEA1HH100T		
	C432,433	nsp	CAP , ELECT		CCEA1HH220T		
	C434	nsp	CAP , ELECT		CCEA1EH470T		
	C435	nsp	CAP , CHIP (1608, 50V/0.1uF)		CCUS1H104KC		
	C436,437	nsp	CAP , CHIP (1608, 50V/330pF)		CCUS1H331JA		
	C438	nsp	CAP , ELECT		CCEA1EH470T		
	C439	nsp	CAP , CHIP (1608, 50V/0.1uF)		CCUS1H104KC		
	C440,441	nsp	CAP , CHIP (1608, 50V/0.01uF)		CCUS1H103KC		
	C442,443	nsp	CAP , ELECT		CCEA1HH220T		
	C447-450	nsp	CAP , CHIP (1608, 50V/100pF)		CCUS1H101JA		
	C453,454	nsp	CAP , CHIP (1608, 50V/100pF)		CCUS1H101JA		
	C458	nsp	CAP , ELECT		CCEA1EH470T		
	C459	nsp	CAP , CHIP (1608, 50V/0.1uF)		CCUS1H104KC		
	C460-463	nsp	CAP , CHIP (1608, 50V/100pF)		CCUS1H101JA		
	C464	nsp	CAP , CHIP (1608, 50V/0.1uF)		CCUS1H104KC		
	C465	nsp	CAP , ELECT		CCEA1EH470T		
	C466-469	nsp	CAP , CHIP (1608, 50V/270pF)		CCUS1H271JA		
	C470,471	nsp	CAP , ELECT		CCEA1HH100T		
	C472,473	nsp	CAP , CHIP (1608, 50V/100pF)		CCUS1H101JA		
	C477	nsp	CAP , ELECT		CCEA1CH470T		
	C478,479	nsp	CAP , CHIP (1608, 50V/0.01uF)		CCUS1H103KC		
	C480	nsp	CAP , CHIP (1608, 50V/4700pF)		CCUS1H472KC		
	C481,482	nsp	CAP , CHIP (1608, 10V/1uF)		CCUS1A105KC		
	C483	nsp	CAP , ELECT		CCEA1EH470T		
	C484	nsp	CAP , CHIP (1608, 50V/0.1uF)		CCUS1H104KC		
	C485	nsp	CAP , ELECT		CCEA1EH470T		
	C486,487	nsp	CAP , CHIP (1608, 50V/0.1uF)		CCUS1H104KC		
	C488	nsp	CAP , CHIP (1608, 50V/100pF)		CCUS1H101JA		
	C489,490	nsp	CAP , CHIP (1608, 50V/0.1uF)		CCUS1H104KC		
	C501	nsp	CAP , CHIP (1608, 50V/0.1uF)		CCUS1H104KC		
	C502	nsp	CAP , CHIP (1608, 50V/0.01uF)		CCUS1H103KC		
	C503,504	nsp	CAP , CHIP (1608, 50V/0.1uF)		CCUS1H104KC		
	C505	nsp	CAP , CHIP (1608, 50V/0.01uF)		CCUS1H103KC		
	C506,507	nsp	CAP , CHIP (1608, 50V/0.1uF)		CCUS1H104KC		
	C508	nsp	CAP , ELECT		CCEA1HH100T		
	C509	nsp	CAP , CHIP (1608, 50V/1000pF)		CCUS1H102KC		
	C510	nsp	CAP , CHIP (1608, 50V/0.1uF)		CCUS1H104KC		
	C511	nsp	CAP , ELECT		CCEA1HH100T		
	C512-517	nsp	CAP , CHIP (1608, 50V/0.1uF)		CCUS1H104KC		
	C518	nsp	CAP , CHIP (1608, 50V/22pF)		CCUS1H220JA		
	C519	nsp	CAP , CHIP (1608, 50V/18pF)		CCUS1H180JA		
	C520,521	nsp	CAP , CHIP (1608, 50V/0.1uF)		CCUS1H104KC		
	C522	nsp	CAP , ELECT		CCEA1HH100T		
	C523,524	nsp	CAP , CHIP (1608, 50V/0.1uF)		CCUS1H104KC		
	C525	nsp	CAP , ELECT		CCEA1CH101T		
	C526	nsp	CAP , CHIP (1608, 50V/0.1uF)		CCUS1H104KC		
	C539	nsp	CAP , CHIP (1608, 50V/0.1uF)		CCUS1H104KC		
	C540	nsp	CAP , CHIP (1608, 50V/0.01uF)		CCUS1H103KC		
	C541	nsp	CAP , CHIP (1608, 50V/1000pF)		CCUS1H102KC		
	C550	nsp	RES , CHIP(0 OHM , 5% , 1608)		CRJ10DJ0R0T		
	C553-555	nsp	RES , CHIP(0 OHM , 5% , 1608)		CRJ10DJ0R0T		
	C557	nsp	CAP , ELECT		CCEA1HH100T		
	C558,559	nsp	CAP , CHIP (1608, 50V/0.1uF)		CCUS1H104KC		
	C560	nsp	CAP , ELECT		CCEA1HH100T		
	C561	nsp	CAP , CHIP (1608, 50V/0.1uF)		CCUS1H104KC		
	C571	nsp	CAP , CHIP (1608, 50V/1000pF)		CCUS1H102KC		
	C567	nsp	CAP , CHIP (1608, 50V/0.1uF)		CCUS1H104KC		
	C572,573	nsp	CAP , CHIP (1608, 50V/1000pF)		CCUS1H102KC		
	C574,575	nsp	CAP , ELECT		CCEA1EH221T		
	C580-582	nsp	RES , CHIP(0 OHM , 5% , 1608)		CRJ10DJ0R0T		
	C587	nsp	RES , CHIP(0 OHM , 5% , 1608)		CRJ10DJ0R0T		
	C588	nsp	CAP , CHIP (1608, 50V/0.1uF)		CCUS1H104KC		
	C591	nsp	RES , CHIP(0 OHM , 5% , 1608)		CRJ10DJ0R0T		
	C592	nsp	CAP , CHIP (1608, 50V/0.01uF)		CCUS1H103KC		
	C596	nsp	RES , CHIP(0 OHM , 5% , 1608)		CRJ10DJ0R0T		

	Ref. No.	Part No.	Part Name	Remarks		Q'ty	New
	C597	nsp	CAP , CHIP (1608, 50V/1000pF)		CCUS1H102KC		
	C601	nsp	CAP , CHIP (1608, 50V/0.1uF)		CCUS1H104KC		
	C602	nsp	CAP , CHIP (1608, 50V/0.01uF)		CCUS1H103KC		
	C603	nsp	CAP , CHIP (1608, 50V/1000pF)		CCUS1H102KC		
	C604	nsp	CAP , CHIP (1608, 50V/0.1uF)		CCUS1H104KC		
	C605	nsp	CAP , CHIP (1608, 50V/0.01uF)		CCUS1H103KC		
	C606	nsp	CAP , CHIP (1608, 50V/1000pF)		CCUS1H102KC		
	C607,608	nsp	CAP , ELECT		CCEA1EH221T		
	C656	nsp	CAP , CHIP (1608, 50V/0.1uF)		CCUS1H104KC		
	C658	nsp	CAP , CHIP (1608, 50V/0.01uF)		CCUS1H103KC		
	C661	nsp	CAP , CHIP (1608, 50V/0.1uF)		CCUS1H104KC		
	C662	nsp	CAP , CHIP (1608, 50V/0.01uF)		CCUS1H103KC		
	C663	nsp	CAP , CHIP (1608, 50V/1000pF)		CCUS1H102KC		
	C664	nsp	CAP , CHIP (1608, 50V/0.1uF)		CCUS1H104KC		
	C665	nsp	CAP , CHIP (1608, 50V/0.01uF)		CCUS1H103KC		
	C666	nsp	CAP , CHIP (1608, 50V/1000pF)		CCUS1H102KC		
	C667	nsp	CAP , CHIP (1608, 50V/0.1uF)		CCUS1H104KC		
	C680	nsp	CAP , CHIP (1608, 50V/0.01uF)		CCUS1H103KC		
	C681	nsp	CAP , CHIP (1608, 50V/1000pF)		CCUS1H102KC		
	C682	nsp	CAP , CHIP (1608, 50V/0.1uF)		CCUS1H104KC		
	C683	nsp	CAP , CHIP (1608, 50V/0.01uF)		CCUS1H103KC		
	C684	nsp	CAP , CHIP (1608, 50V/1000pF)		CCUS1H102KC		
	C685	nsp	CAP , CHIP (1608, 50V/0.1uF)		CCUS1H104KC		
	C686	nsp	CAP , CHIP (1608, 50V/0.01uF)		CCUS1H103KC		
	C687	nsp	CAP , CHIP (1608, 50V/1000pF)		CCUS1H102KC		
	C688	nsp	CAP , CHIP (1608, 50V/0.1uF)		CCUS1H104KC		
	C689	nsp	CAP , CHIP (1608, 50V/0.01uF)		CCUS1H103KC		
	C690	nsp	CAP , CHIP (1608, 50V/1000pF)		CCUS1H102KC		
	C691	nsp	CAP , CHIP (1608, 50V/0.01uF)		CCUS1H103KC		
	C692	nsp	CAP , CHIP (1608, 50V/0.1uF)		CCUS1H104KC		
	C693	nsp	CAP , CHIP (1608, 50V/1000pF)		CCUS1H102KC		
	C694	nsp	CAP , CHIP (1608, 50V/0.1uF)		CCUS1H104KC		
	C695	nsp	CAP , CHIP (1608, 50V/0.01uF)		CCUS1H103KC		
	C696	nsp	CAP , CHIP (1608, 50V/1000pF)		CCUS1H102KC		
	C697	nsp	CAP , CHIP (1608, 50V/0.1uF)		CCUS1H104KC		
	C698	nsp	CAP , CHIP (1608, 50V/0.01uF)		CCUS1H103KC		
	C699	nsp	CAP , CHIP (1608, 50V/1000pF)		CCUS1H102KC		
	C700	nsp	RES , CHIP(0 OHM , 5% , 1608)		CRJ10DJ0R0T		
	C701-703	nsp	CAP , CHIP (1608, 50V/0.1uF)		CCUS1H104KC		
	C704	nsp	CAP , ELECT		CCEA1CH101T		
	C705,706	nsp	CAP , CHIP (1608, 50V/0.1uF)		CCUS1H104KC		
	C707	nsp	CAP , ELECT		CCEA1HH100T		
	C708	nsp	CAP , CHIP (1608, 50V/0.1uF)		CCUS1H104KC		
	C709	00MDK56333300	CAP , CHIP(2012, 33nF/50V)		CCUC1H333KC		
	C710,711	943132003120S	CAP , CHIP (3216, 100V/0.1uF)		CCUP2A104KC		
	C712,713	00MDK56333300	CAP , CHIP(2012, 33nF/50V)		CCUC1H333KC		
	C714,715	943132003120S	CAP , CHIP (3216, 100V/0.1uF)		CCUP2A104KC		
	C716	00MDK56333300	CAP , CHIP(2012, 33nF/50V)		CCUC1H333KC		
	C717	nsp	CAP , CHIP (1608, 50V/0.1uF)		CCUS1H104KC		
	C718	943134003040S	CAP , ELECT		CCET1HKLH332KK8		
	C719	00D2544692901	CAP , ELECT(ELNA, RFO, 63V/10U)		CCEA1JRFO100T		
	C724-726	nsp	CAP , CHIP (1608, 50V/0.1uF)		CCUS1H104KC		
	C728,729	nsp	RES , CHIP(0 OHM , 5% , 1608)		CRJ10DJ0R0T		
	C731,732	00MDD95331300	CAP , CHIP		CCUC1H331JA		
	C733	nsp	CAP , METALIZED FILM(100V/0.47UF, 5%)		CCME2A474JR08T		
	C734,735	943132003110S	CAP , CHIP (2012, 100V/0.1uF)		CCUC2A104KC		
	C736,737	943132003100S	CAP , CHIP (2012, 100V/0.01uF)		CCUC2A103KC		
	C745,746	nsp	CAP , CHIP (1608, 50V/0.1uF)		CCUS1H104KC		
	C751-753	nsp	CAP , CHIP (1608, 50V/0.1uF)		CCUS1H104KC		
	C754	nsp	CAP , ELECT		CCEA1CH101T		
	C755,756	nsp	CAP , CHIP (1608, 50V/0.1uF)		CCUS1H104KC		
	C757	nsp	CAP , ELECT		CCEA1HH100T		
	C758	nsp	CAP , CHIP (1608, 50V/0.1uF)		CCUS1H104KC		
	C759	00MDK56333300	CAP , CHIP(2012, 33nF/50V)		CCUC1H333KC		
	C760,761	943132003120S	CAP , CHIP (3216, 100V/0.1uF)		CCUP2A104KC		
	C762,763	00MDK56333300	CAP , CHIP(2012, 33nF/50V)		CCUC1H333KC		
	C764,765	943132003120S	CAP , CHIP (3216, 100V/0.1uF)		CCUP2A104KC		

	Ref. No.	Part No.	Part Name	Remarks		Q'ty	New
	C766	00MDK56333300	CAP , CHIP(2012, 33nF/50V)		CCUC1H333KC		
	C767	nsp	CAP , CHIP (1608, 50V/0.1uF)		CCUS1H104KC		
	C768	943134003040S	CAP , ELECT		CCET1HKLH332KK8		
	C769	00D2544692901	CAP , ELECT(ELNA, RFO, 63V/10U)		CCEA1JRFO100T		
	C781,782	00MDD95331300	CAP , CHIP		CCUC1H331JA		
	C783	nsp	CAP , METALIZED FILM(100V/0.47UF, 5%)		CCME2A474JR08T		
	C784,785	943132003110S	CAP , CHIP (2012, 100V/0.1uF)		CCUC2A104KC		
	C786,787	943132003100S	CAP , CHIP (2012, 100V/0.01uF)		CCUC2A103KC		
	C790	nsp	CAP , METALIZED FILM(100V/0.47UF, 5%)	E2	CCME2A474JR08T		
	C797,798	nsp	CAP , CHIP (1608, 50V/0.1uF)		CCUS1H104KC		
	C891-893	nsp	RES , CHIP(0 OHM , 5% , 1608)		CRJ10DJ0R0T		
	C900,901	nsp	CAP , ELECT		CCEA1HH100T		
	C902,903	nsp	CAP , CHIP (1608, 50V/0.1uF)		CCUS1H104KC		
	C991	nsp	CAP , ELECT		CCEA1CH100T		
	C992	nsp	CAP , CHIP (1608, 50V/0.1uF)		CCUS1H104KC		
	C993	nsp	CAP , CHIP (1608, 50V/0.01uF)		CCUS1H103KC		
	C994	nsp	CAP , ELECT		CCEA1CH100T		
	C995,996	nsp	CAP , CHIP (1608, 50V/0.1uF)		CCUS1H104KC		
RESISTORS GROUP							
	R111,112	nsp	RES , METAL OXIDE FILM		KRG1SANJ222RT		
	R115	nsp	RES , METAL OXIDE FILM		KRG1SANJ222RT		
	R429	nsp	RES , CHIP 1%		CRJ10DF1202T		
	R565	nsp	FERRITE , CHIP BEAD(220ohm, 2012)		CLZ9R006Z		
	R569	nsp	FERRITE , CHIP BEAD(220ohm, 2012)		CLZ9R006Z		
	R575	nsp	FERRITE , CHIP BEAD(220ohm, 2012)		CLZ9R006Z		
	R579	nsp	FERRITE , CHIP BEAD(220ohm, 2012)		CLZ9R006Z		
	R700	nsp	CAP , CHIP (1608, 50V/0.1uF)		CCUS1H104KC		
	R709,710	943124003380S	RES , CHIP , 18 OHM, 1% , 1/8W , 2012		CRJ18AF18R0T		
	R711,712	943124003360S	RES , CHIP , 3.3 OHM, 1% , 1/8W , 2012		CRJ18AF3R30T		
	R718,719	nsp	RES , METAL OXIDE FILM		KRG1SANJ222RT		
	R722	nsp	RES , METAL OXIDE FILM		KRG1SANJ222RT		
	R759,760	943124003380S	RES , CHIP , 18 OHM, 1% , 1/8W , 2012		CRJ18AF18R0T		
	R761,762	943124003360S	RES , CHIP , 3.3 OHM, 1% , 1/8W , 2012		CRJ18AF3R30T		
	R997	nsp	CAP , CHIP (1608, 50V/1000pF)		CCUS1H102KC		
	R998	nsp	CAP , CHIP (1608, 50V/0.01uF)		CCUS1H103KC		
	R999	nsp	CAP , CHIP (1608, 50V/0.1uF)		CCUS1H104KC		
OTHER PATRS GROUP							
	BK51	nsp	BRACKET , PCB		CMD1A569		
	BN62	nsp	WIRE ASS'Y (8P, 2MM, 250MM)		CWB1C008250NG		
	CN24	nsp	WAFER		CJP11GA117ZY		
	CN25	nsp	WAFER , STRAIGHT(DVD LOADER)		CJP06GA19ZY		
	CN26	nsp	WAFER , STRAIGHT		CJP05GA19ZY		
	CN31	nsp	WAFER(11P, ST 1.25MM)		CJP11GA115ZY		
	CN41	nsp	WAFER, STRSIGHT, 1MM, SMD		CJP30GA193ZY		
	CN42	nsp	WAFER , CARD CABLE (SMD, 1MM)		CJP23GA193ZY		
	CN43,44	nsp	LOCKING TYPE , STRAIGHT WAFER , 2MM		CJP07GI236ZW		
	CN45	nsp	LOCKING TYPE , STRAIGHT WAFER , 2MM		CJP13GI236ZW		
	CN61	nsp	LOCKING TYPE , STRAIGHT WAFER , 2.5MM		CJP05GI237ZW		
	ET51	nsp	PALTE , EARTH		HJT1A025		
	ET61	nsp	PALTE , EARTH		HJT1A025		
	ET71,72	nsp	PALTE , EARTH		HJT1A025		
	ET81	nsp	PALTE , EARTH		HJT1A025		
	JK51	943643002710S	JACK , BOARD		CJJ4M046Z		
	JK63	90M-YT004010R	TERMINAL , IN/OUT		CJJ4R019W		
	JK64	262010004005S	MODULE , OPTICAL (RX,3.3V)		HJSTORX147L		
	JK71	943646011730S	TERMINAL , SPEAKER (2P, RED BLACK)		CJJ5N016Z		*
	JK72	943646011740S	TERMINAL , SPEAKER (2P, BLACK, RED)		CJJ5N017Z		*

	Ref. No.	Part No.	Part Name	Remarks		Q'ty	New
	L101,102	nsp	BEAD , FERRITE (FCM2012KF-121T08 , 120 OHM)		CLZ9R010Z		
	L104-107	nsp	BEAD , FERRITE (FCM2012KF-121T08 , 120 OHM)		CLZ9R010Z		
	L201	nsp	INDUCTOR CHIP 10UH (3225 PKG)		HLQ10E100KRZ		
	L301	nsp	FERRITE , CHIP BEAD(220ohm, 2012)		CLZ9R006Z		
	L303,304	nsp	BEAD , FERRITE (FCM2012KF-121T08 , 120 OHM)		CLZ9R010Z		
	L401,402	nsp	BEAD , FERRITE (FCM2012KF-121T08 , 120 OHM)		CLZ9R010Z		
	L406	nsp	BEAD , FERRITE (FCM2012KF-121T08 , 120 OHM)		CLZ9R010Z		
	L501	nsp	BEAD , FERRITE (FCM2012KF-121T08 , 120 OHM)		CLZ9R010Z		
	L601	nsp	BEAD , FERRITE (FCM2012KF-121T08 , 120 OHM)		CLZ9R010Z		
	L603-605	nsp	BEAD , FERRITE (FCM2012KF-121T08 , 120 OHM)		CLZ9R010Z		
	L701,702	nsp	COIL , SPEAKER (10UH/7A)		CLZ9Z116Z		*
	L705-712	nsp	BEAD , FERRITE (FCM2012KF-121T08 , 120 OHM)		CLZ9R010Z		
	L723,724	nsp	CHIP , BEAD		HLZ9Z014Z		
	L727,728	nsp	CHIP , BEAD		HLZ9Z014Z		
	L751,752	nsp	COIL , SPEAKER (10UH/7A)		CLZ9Z116Z		*
	WN24	nsp	WAFER , CD MECHA		CJP16GA117ZY		
	X201	943141001190S	CRYSTAL, 16.934MHz, HC-49/SMD, 12pF, 25PPM		COX16934E120S		
	X202	943142011280S	16M Resonator		COXCSTCE16M0V51		
	X401	90M-JX001070R	CRYSTAL, 12.288MHz, HC-49/S, 32pF, 50PPM		HOX12288E320C		
	X501	943141003490S	CRYSTAL, 13.500MHz, HC-49/SMD, 16pF, 30PPM		COX13500E160S		
		nsp	HEAT SINK		CMY1A368	1	*

ETHER NET PCB ASS'Y ⚠3

	Ref. No.	Part No.	Part Name	Remarks		Q'ty	New
SEMICONDUCTORS GROUP							
	IC21	236710076509S	I.C , IPOD AUTHENTICATION CHIP FROM MARANTZ		CVI236710076509S-DM		
	IC22	9432360117505	USB 2.0 De/MultiPlexer Switch (480Mbps, 1:2)_		CVITS3USB30EDGSR		*
	IC23,24	231810051504S	I.C , DC-DC CONVERTER (1A,QFN-20P)		CVIEN5311QI		
	IC28	231810041507S	IC , DCDC Converter (3.5A, SOP8) SANKEN		CVISI8005QTL		
	D201,202	90M-HD201840R	DIODE , RECTIFIER		HVD1SR159-200		
	D203,204	nsp	DIODE , CHIP		CVDKDS160RTKP		
	D210	nsp	DIODE , SCHOTTKY (40V,3A, DO-214AC) DELTA		CVDSS34SR		
	D211	nsp	DIODE , ZENER (CHIP,5.6V)		HVDUDZS5.6BSR		
	D212	nsp	DIODE , ZENER (CHIP,7.5V)		HVDUDZS7.5BSR		
	D213-216	nsp	ESD SUPPRESSOR (ASQS 12U 02 0R2, 0.2pF/12V 1005)		CLZ9Z120Z		
	D271	nsp	DIODE , ZENER (CHIP,5.1V)		HVDUDZS5.1BSR		
	Q201-205	nsp	T.R , CHIP , SOT-23		HVTKRC102S		
	Q206	nsp	T.R , CHIP , SOT-23		HVTKRA102S		
	Q207	nsp	T.R , CHIP , SOT-23		HVTKRC102S		
	Q208,209	nsp	T.R , CHIP , SOT-23		HVTKRC104S		
CAPACITORS GROUP							
	C203	nsp	CAP , CHIP ELECT		HCEC0JRV2220T		
	C206	nsp	CAP , CHIP ELECT(100UF/25V)		CCEC1ERV2101T		
	C208	nsp	CAP , CHIP ELECT (100UF/16V)		HCEC1CRV2101T		
	C209-211	nsp	CAP , ELEC SMD (150uF/25V, 8X10.5, SANYO)		CCEC1EHVH151TY		
	C214	nsp	CAP , CHIP (1608, 50V/0.1uF)		CCUS1H104KC		
	C215	nsp	CAP , CHIP(2012 SIZE)		CCUC1A475ZF		
	C220	nsp	CAP , CHIP (1005, 16V/0.1uF)		CCUI1C104KC		
	C224	nsp	CAP , CHIP (1608, 10V/1uF)		CCUS1A105KC		
	C225	nsp	CAP, CHIP (4.7uF/25V, 2012, MURATA GRM21)		CCUMUC1E475KC		
	C226-231	nsp	CAP , CHIP (1608, 50V/1000pF)		CCUS1H102KC		
	C233-235	nsp	CAP , CHIP (1608, 50V/1000pF)		CCUS1H102KC		
	C236	nsp	CAP, CHIP (4.7uF/25V, 2012, MURATA GRM21)		CCUMUC1E475KC		
	C237-239	nsp	CAP , CHIP (1608, 50V/1000pF)		CCUS1H102KC		
	C240	nsp	CAP , CHIP (1608, 10V/1uF)		CCUS1A105KC		
	C241	nsp	CAP , CHIP (1608, 50V/1000pF)		CCUS1H102KC		
	C245-255	nsp	CAP , CHIP (1608, 50V/0.01uF)		CCUS1H103KC		
	C257,258	nsp	CAP , CHIP (1608, 50V/0.01uF)		CCUS1H103KC		
	C259	nsp	CAP, CHIP (4.7uF/25V, 2012, MURATA GRM21)		CCUMUC1E475KC		
	C260	nsp	CAP , CHIP (1608, 50V/0.1uF)		CCUS1H104KC		
	C264,265	nsp	CAP , CHIP (1608, 50V/0.1uF)		CCUS1H104KC		
	C268	nsp	CAP , CHIP (1608, 50V/0.1uF)		CCUS1H104KC		
	C270,271	nsp	CAP , CHIP (1608, 50V/0.1uF)		CCUS1H104KC		
	C273-275	nsp	CAP , CHIP (1608, 50V/0.1uF)		CCUS1H104KC		
	C279,280	nsp	CAP , CHIP (1608, 50V/0.1uF)		CCUS1H104KC		
	C282-286	nsp	CAP , CHIP (1608, 50V/0.1uF)		CCUS1H104KC		
	C288	nsp	CAP , CHIP (1608, 50V/180pF)		CCUS1H181JA		
	C290,291	nsp	CAP , CHIP ELECT(220UF/6.3V)		HCEC0JRV2221T		
	C294	nsp	CAP , CHIP (1608, 50V/0.1uF)		CCUS1H104KC		
	C295	nsp	CAP , CHIP ELECT		HCEC1CRV2220T		
	C298,299	nsp	CAP , CHIP (1608, 10V/4.7uF)		CCUS1A475KC		
	C502	nsp	CAP, CHIP (4.7uF/25V, 2012, MURATA GRM21)		CCUMUC1E475KC		
	C503	nsp	CAP , CHIP (1608, 50V/0.1uF)		CCUS1H104KC		
	C504,505	nsp	CAP, CHIP (4.7uF/25V, 2012, MURATA GRM21)		CCUMUC1E475KC		
	C506	nsp	CAP , CHIP (1608, 50V/0.1uF)		CCUS1H104KC		
OTHER PATRS GROUP							
	BK81,82	nsp	BRACKET , PCB		CMD1A569		
	CN21	nsp	WAFER , SMD (2MM PITCH)		CJP05GA208ZY		
	CN22	nsp	WAFER , SMD (2MM PITCH)		CJP06GA208ZY		
	CN23	nsp	WAFER , CARD CABLE SMD		CJP07GA193ZY		

	Ref. No.	Part No.	Part Name	Remarks		Q'ty	New
	CN25	nsp	WAFER, 2mm, SMD, Vertical, 8P		CJP08GA208ZY		
	CN26	nsp	WAFER , CARD CABLE (SMD, 1MM)		CJP23GA193ZY		
	CN27	nsp	120p connector(SMD)		CJP120GA277ZP		
	F201,202	943661006910S	POLY SWITCH (1.6A, 8V)		CBA5H1600PSUYT		
	JK21	00D2051333009	RJ45 with LED		CJJ9L019Z		
	L201	nsp	BEAD , FERRITE (FCM2012KF-121T08 , 120 OHM)		CLZ9R10Z		
	L202	nsp	FERRITE , CHIP BEAD(220ohm, 2012)		CLZ9R06Z		
	L203	nsp	COIL , SMD POWER (22UH/3A)		CLQ13E220MRZ		
	L204	nsp	BEAD , FERRITE (FCM2012KF-121T08 , 120 OHM)		CLZ9R10Z		

SMPS PCB ASS'Y

	Ref. No.	Part No.	Part Name	Remarks		Q'ty	New
SEMICONDUCTORS GROUP							
	IC90	90M-HC300960R	I.C , REGULATOR(TO220IS-4)		CVIKIA78D33PI		
	IC91	943235003220S	IC, CooLSET ICE3B0365J		CVIICE3B0365J		
	IC92	943235003200S	IC , COOLSET		CVIICE2B265		
	IC93	943235003210S	I.C , PWM CONTROLLER(PG-DIP-8)		CVIICE2QS01		
	IC94	00MHC3891899F	I.C , VOL REGULATOR(18V, TO-220IS)		CVIKIA7818API		
	IC95,96	90M-HC300770R	I.C , REGULATOR		HVIKIA431BAT		
	IC97	00MHC3891299F	I.C , REGULATOR		HVIKIA7812API		
	IC98	00D2631099022	I.C , REGULATOR		HVIKIA7912PI		
	IC99	90M-HC300770R	I.C , REGULATOR		HVIKIA431BAT		
	D901,902	90M-HD201860R	DIODE , SCHOTTKY		HVDUF4004T		
	D903	90M-HD201870R	DIODE , SCHOTTKY		HVDUF4007T		
	D904	90M-HD201860R	DIODE , SCHOTTKY		HVDUF4004T		
	D905	90M-HD201870R	DIODE , SCHOTTKY		HVDUF4007T		
	D906,907	90M-HD201860R	DIODE , SCHOTTKY		HVDUF4004T		
	D908	90M-HD201870R	DIODE , SCHOTTKY		HVDUF4007T		
	D909,910	943203003150S	DIODE		HVD1N4007T		
	D911	nsp	DIODE , FAST SWITCHING(0.5W, SOD-123)		CVD1N4448W		
	D912	nsp	DIODE , ZENER		HVDMTZJ20BT		
	D913	nsp	DIODE , ZENER		HVDMTZJ16BT		
	D914,915	nsp	DIODE , ZENER		HVDMTZJ20BT		
	D916	nsp	DIODE , ZENER		HVDMTZJ24BT		
	D917	nsp	DIODE , FAST SWITCHING(0.5W, SOD-123)		CVD1N4448W		
	D918	90M-HD201890R	DIODE , ULTRA FAST (DELTA)		HVDUF5404H		
	D919	nsp	DIODE , ZENER(27V/0.5W, SOD-123)		CVDMM1Z27		
	D921	nsp	DIODE , ZENER(20V/0.5W, SOD-123)		CVDMM1Z20		
	D922	943203003150S	DIODE		HVD1N4007T		
	D923,924	nsp	DIODE , FAST SWITCHING(0.5W, SOD-123)		CVD1N4448W		
	D927-929	nsp	DIODE , FAST SWITCHING(0.5W, SOD-123)		CVD1N4448W		
	D931	90M-HD201990R	DIODE		HVD31DQ06H		
	D933	90M-HD201860R	DIODE , SCHOTTKY		HVDUF4004T		
	D934	nsp	DIODE , ZENER(27V/0.5W, SOD-123)		CVDMM1Z27		
	D935	nsp	DIODE , ZENER		HVDMTZJ16BT		
	D942	943204003160S	DIODE , SCHOTTKY (100V/3A)		HVD31DQ10FC5		
	D943	90M-HD201890R	DIODE , ULTRA FAST (DELTA)		HVDUF5404H		
	D944,945	90M-HD201860R	DIODE , SCHOTTKY		HVDUF4004T		
	D946	90M-HD201890R	DIODE , ULTRA FAST (DELTA)		HVDUF5404H		
	D951	943203003140S	DIODE , SCHOTTKY(20A, 200V)		CVDFCH20A20		
	Q901,902	90M-HT600060R	T.R		HVTKSA708YT		
	Q903	943235003230S	I.C		CVISPP11N60C3		
	Q925	90M-HT800050R	T.R		HVTKTC3198YT		
	Q932	90M-BA001460R	T.R , TO-92M		HVTKRC107MT		
	Q934	00D2710323907	T.R		HVTKTA1273YT		
	Q936	00MBA20001000	T.R , TO-92M		HVTKRC102MT		
	Q937	00MBA10001000	T.R , TO-92M		HVTKRA102MT		
CAPACITORS GROUP							
	C901	nsp	CAP , ELECT(TDA, 450V/270UF, 105C, 35X30)		CCET450VTDA271N		*
	C902	943134010940S	CAP, ELECT(22uF/100V, 6X11)		CCEA2AH220TS		
	C903	00MDK96472300	CAP , CHIP		CCUC1H472KC		
	C904	943132003090S	CAP , CHIP		CCUC1H474KC		
	C905	nsp	CAP , CERAMIC		CCKT3A222KBL		
	C906	90M-OA000320R	CAP , ELECT		CCEA1HH220TS		
	C907	943134010940S	CAP, ELECT(22uF/100V, 6X11)		CCEA2AH220TS		
	C908	00MDK96472300	CAP , CHIP		CCUC1H472KC		
	C909	943132003090S	CAP , CHIP		CCUC1H474KC		
	C910	nsp	CAP , CERAMIC		CCKT3A222KBL		
	C911	943134003060S	CAP , ELECT(KRH, 450V/22UF, 12.5X25)		CCET450VKRH220KS		
	C912	00MDK56222300	CAP , CHIP(2012, 2200PF/50V)		CCUC1H222KC		
	C913	00MDD95101300	CAP , CHIP		CCUC1H101JA		
	C914	nsp	CAP , CERAMIC		CCKT3A471KBL		
	C915	943134010940S	CAP, ELECT(22uF/100V, 6X11)		CCEA2AH220TS		

	Ref. No.	Part No.	Part Name	Remarks		Q'ty	New
	C916	nsp	CAP , CHIP		CCUC1H471JA		
	C917	nsp	CAP , CERAMIC		CCKT3A222KBL		
	C918	943132002470S	CHIP, CAP 0.1UF/50V/2012		CCUC1H104KC		
	C919	nsp	CAP , CHIP		CCUC1H103KC		
	C921	943132002470S	CHIP, CAP 0.1UF/50V/2012		CCUC1H104KC		
	C922	943134003030S	CAP , ELECT(KRM, 100V/1UF, 105C, 5X11)		CCEA2AH1R0TS		
	C923	943132002470S	CHIP, CAP 0.1UF/50V/2012		CCUC1H104KC		
	C924	90M-OA000320R	CAP , ELECT		CCEA1HH220TS		
	C925-928	943132002470S	CHIP, CAP 0.1UF/50V/2012		CCUC1H104KC		
	C929	nsp	CAP , CHIP		CCUC1H103KC		
	C930	943132002470S	CHIP, CAP 0.1UF/50V/2012		CCUC1H104KC		
	C931	nsp	CAP , ELECT (105'C, 10X25) 10V 2200uF, KLH SERIES		CCEA1AKLH222EKS		
	C932	nsp	CAP , CHIP(2012, 1uF/50V)		CCUC1H105KC		
	C933	00MOA47701020	CAP , ELECT		CCEA1AH471TS		
	C934	nsp	CAP , CHIP		CCUC1H103KC		
	C935	90M-OA000320R	CAP , ELECT		CCEA1HH220TS		
	C936	00MOA47701020	CAP , ELECT		CCEA1AH471TS		
	C937	nsp	CAP , ELECT		CCEA1EH102ES		
	C938	943134003000S	CAP , ELECT		CCEA1EH101TS		
	C939	90M-OA000320R	CAP , ELECT		CCEA1HH220TS		
	C940	nsp	CAP , CHIP(2012, 1uF/50V)		CCUC1H105KC		
	C941	943134007810S	CAP , ELECT(10V/2200UF, 105C, 10X20)		CCEA1AH222ES		
	C942	90M-OA000310R	CAP , ELECT		CCEA1HH1R0TS		
	C943	00MOA47701020	CAP , ELECT		CCEA1AH471TS		
	C944	90M-OA000320R	CAP , ELECT		CCEA1HH220TS		
	C945	943132002470S	CHIP, CAP 0.1UF/50V/2012		CCUC1H104KC		
	C946	nsp	CAP , ELECT		CCEA1EH102ES		
	C947,948	943134003000S	CAP , ELECT		CCEA1EH101TS		
	C949	90M-OA000320R	CAP , ELECT		CCEA1HH220TS		
	C950	943134003000S	CAP , ELECT		CCEA1EH101TS		
	C951	nsp	CAP , ELECT		CCEA1EH220TS		
	C952	nsp	CAP , CERAMIC		CCKT3A102KBL		
	C953	nsp	CAP , CHIP		CCUC1H103KC		
	C954	943132002470S	CHIP, CAP 0.1UF/50V/2012		CCUC1H104KC		
	C955	nsp	CAP , CHIP		CCUC1H103KC		
	C956	943132002470S	CHIP, CAP 0.1UF/50V/2012		CCUC1H104KC		
	C957	nsp	CAP , CHIP		CCUC1H103KC		
	C958	943132002470S	CHIP, CAP 0.1UF/50V/2012		CCUC1H104KC		
	C959	nsp	CAP , CHIP		CCUC1H103KC		
	C960	943132002470S	CHIP, CAP 0.1UF/50V/2012		CCUC1H104KC		
	C961	nsp	CAP , CHIP		CCUC1H103KC		
	C962	943132002470S	CHIP, CAP 0.1UF/50V/2012		CCUC1H104KC		
	C963	nsp	CAP , CHIP		CCUC1H103KC		
	C964	nsp	CAP , CERAMIC (4700PF/1KV)		CCKT3A472KBL		
	C967,968	nsp	CAP , ELECT		CCEA1HH102ES		
	C972-975	943132002470S	CHIP, CAP 0.1UF/50V/2012		CCUC1H104KC		
	C991	nsp	CAP , CHIP		CCUC1H224KC		
RESISTORS GROUP							
	R910	nsp	RES , WIRE WOUND (1W/0.68 OHM)		CRW1PJ0R68V		
	R911	nsp	RES , METAL OXIDE FILM (2W, 68K)		CRG2SANJ683RT		
	R920,921	nsp	RES , WIRE WOUND (1 W/ 0.2 OHM)		CRW1PJR20V		
	R928	nsp	RES , METAL OXIDE FILM (2W, 68K)		CRG2SANJ683RT		
	R934	nsp	RES, CHIP, 6.8K OHM, 1%, 1/8W, 2012		CRJ18AF6801T		
	R935	nsp	RES , CHIP , 5.1K OHM, 1% , 1/8W , 2012		CRJ18AF5101T		
	R937	nsp	RES , METAL OXIDE FILE (10K , J)		CRG1SANJ103RT		
	R949	nsp	RES , CHIP , 4.3K OHM, 1% , 1/8W , 2012		CRJ18AF4301T		
	R954	nsp	RES , CHIP , 5.1K OHM, 1% , 1/8W , 2012		CRJ18AF5101T		
	R956	nsp	RES , CHIP , 5.1K OHM, 1% , 1/8W , 2012		CRJ18AF5101T		
	R958	nsp	RES , METAL OXIDE FILM		CRG1ANJ220H		
	R960	nsp	RES , METAL OXIDE FILM (270 OHM)		KRG1SANJ271RT		
	R985	nsp	RES, CHIP, 43K OHM, 1%, 1/4W, 3216		CRJ14CF4302T		

	Ref. No.	Part No.	Part Name	Remarks		Q'ty	New
OTHER PATRS GROUP							
	BD89-99	90M-FC900340R	CHIP , BEAD		HLZ9Z014Z		
⚠	CN91	943641009280S	INLET , AC (250V/2.5A PCB MOUNT TYPE)	E2	CJJ8A012Z		
⚠	CN91	00D2033905015	INLET , AC (125V/7A PCB MOUNT TYPE)	E3	CJJ8A013Z		
	CN92	nsp	WIRE ASS'Y (5P, 2.5MM, 350MM, WITH HEMELON)		CWB1D90535058001		
	CN93	nsp	WIRE ASS'Y (13P, 2MM, 120MM)		CWB1C91312047		
	CN94	nsp	WIRE ASS'Y (7P, 2MM, 150MM)		CWB1C90715047		
⚠	CX91	943133003080S	CAP , POLYPROPYLENE FILM		CCQF2E224KZE		
⚠	CX92	90M-OF100550R	CAP , X2		CCQF2E104KZC		
	CY91-93	90M-DK100930R	CAP , CERAMIC (400V Y-CAP)		CCKDHS102ME		
	CY94	90M-DK100870R	CAP , CERAMIC (400V Y-CAP)		CCKDHS222ME		
⚠	DB91	943203003170S	DIODE , BRIDGE		HVDGBJ606		
	F901	00D2061090060	FUSE, 215 SERIES, 4A, 250V		CBA2C4000TLHEY		
	FH91,92	nsp	HOLDER , FUSE		KJCFC5S		
	JS90-99	00MNI05000110	RES , CHIP , 0 OHM, 5% , 1/8W , 2012		CRJ18AJ0R0T		
	L921-923	943111003320S	COIL , CHOCK(6.8uH)		CLZ9Z040Y		
	L925	943111003320S	COIL , CHOCK(6.8uH)		CLZ9Z040Y		
	L928	943111003330S	COIL , CHOKE(7UH)		CLZ9Z090Z		
	L929,930	nsp	CORE , BEAD		HLZ93001Z		
⚠	LF91,92	943111011760S	LINE FILTER, 10MH, 0.5PI, 50TS		CLZ9Z122Z		*
⚠	LF93	943111011770S	LINE, FILTER (150uH, RING-616)		CLZ9Z121Z		*
	PC91-95	90M-HW100710R	I.C , PHOTO COUPLER		HVIPC17L1CB		
⚠	TF91	943102011250S	TRANS , SWITCHING (EE1625, M-CR603)		CLT9Z064ZE		
⚠	TF92	943102011260S	TRANS , SWITCHING (EE2525, M-CR603)		CLT9Z065ZE		
⚠	TF93	943102011270S	TRANS , SWITCHING (EER4042, M-CR603)		CLT9Z066ZE		
⚠	TH91	90M-HH000110R	NTC , THERMISTOR (10MM PITCH)		KRT5D15MSFC		
	TS91	nsp	PROTECTOR, THERMAL(80'C, 100mm)ST-22 SEIRES		CRTST22080120W		*
⚠	VT91	943251011310S	VARISTOR(560V, 14mm)		CRVSVC561D14A		
		nsp	BRACKET , THERMAL SENSOR		CMD1A720	1	
		nsp	HOLDER, IC		CMH1A251	1	
		nsp	MICA , SILICONE		CMX2A164	1	
		nsp	HEAT SINK		CMY2A283	1	
		nsp	HEAT, SINK		CMY3A222X	1	